# STEEL SHOP DETAILS AND WORKING DRAWING

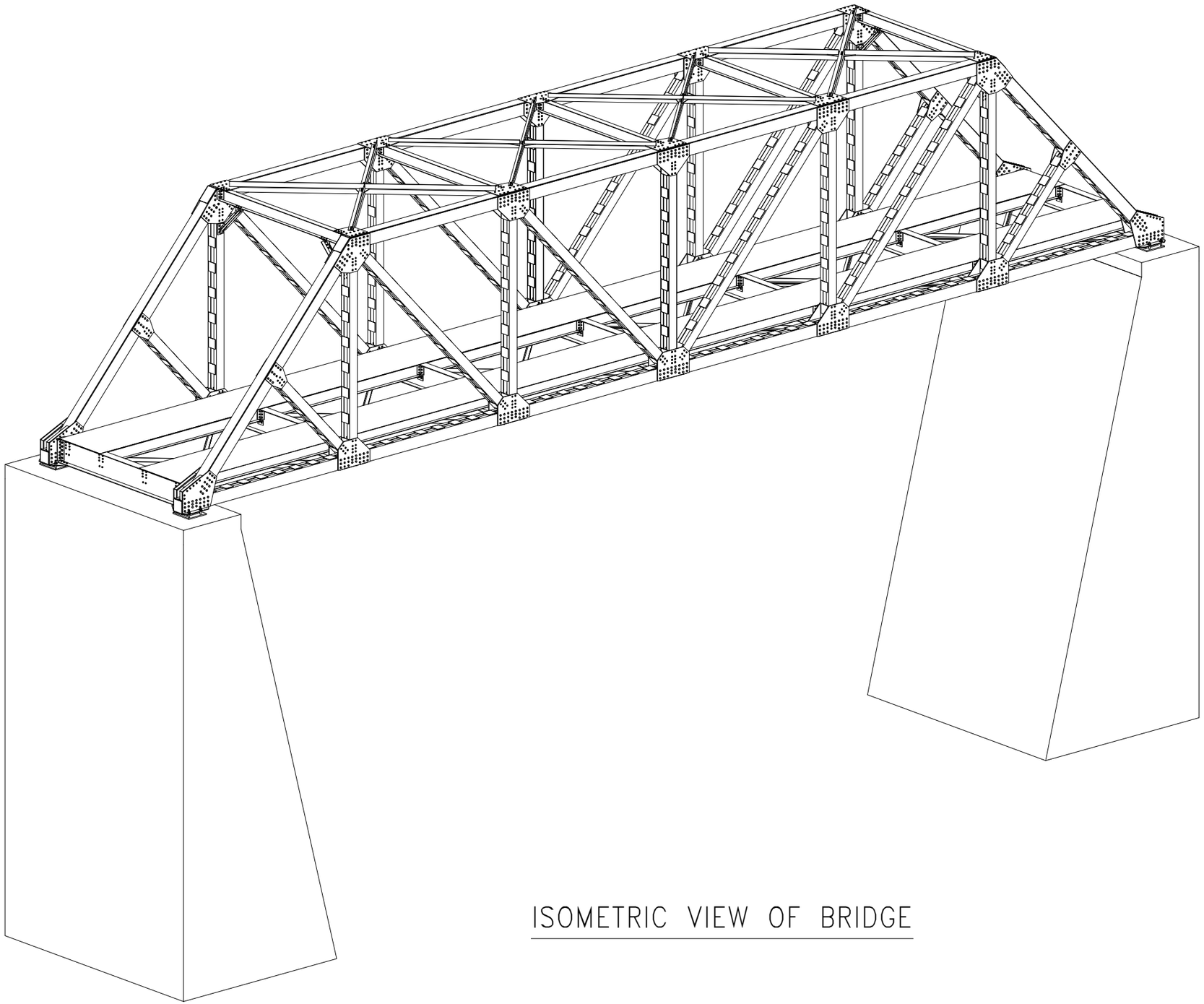

ISOMETRIC VIEW OF BRIDGE

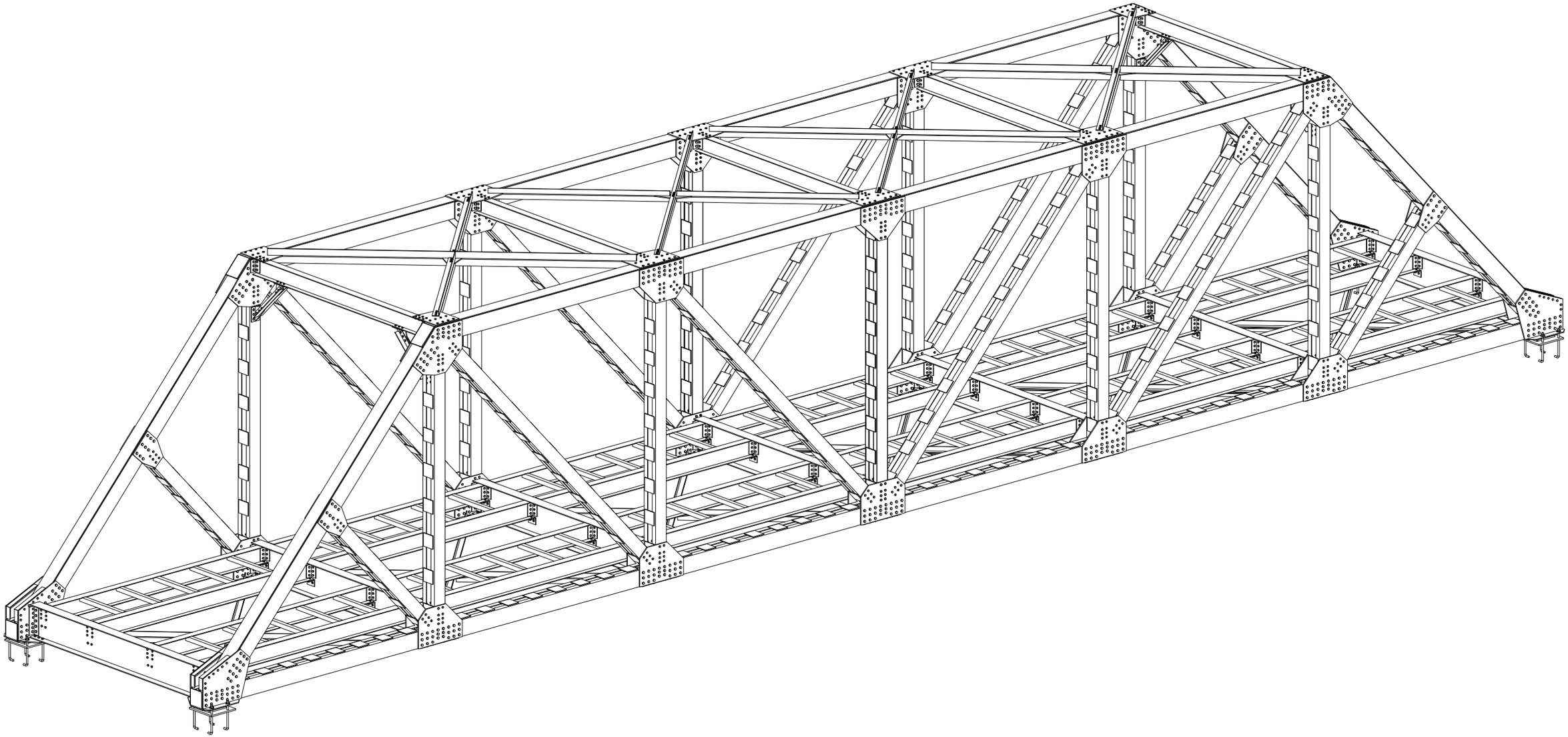

ISOMETRIC VIEW OF BRIDGE

CHQ PLATE HIDDEN

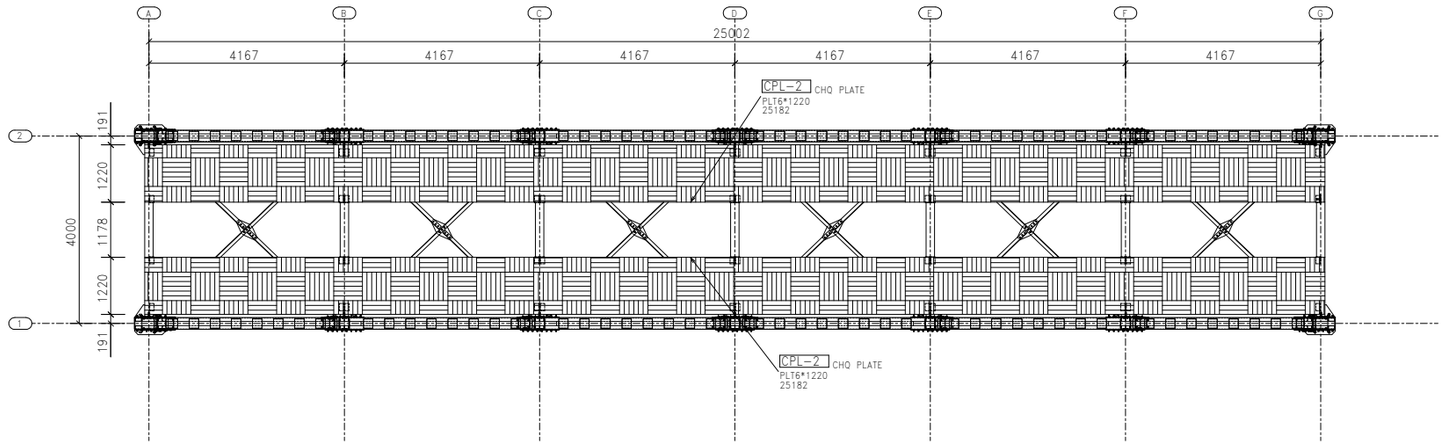


GENERAL PLAN OF BRIDGE

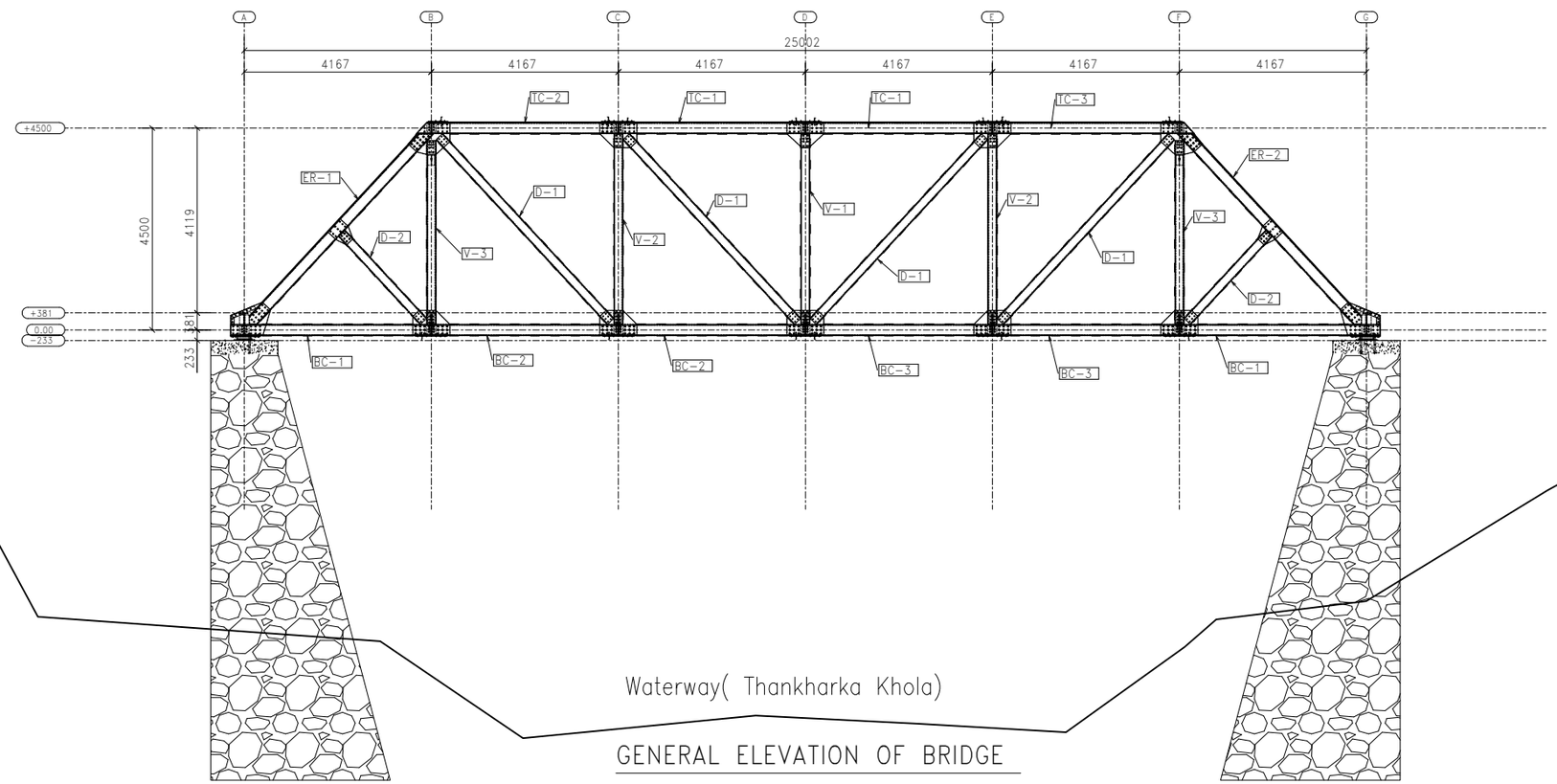


GENERAL ELEVATION OF BRIDGE

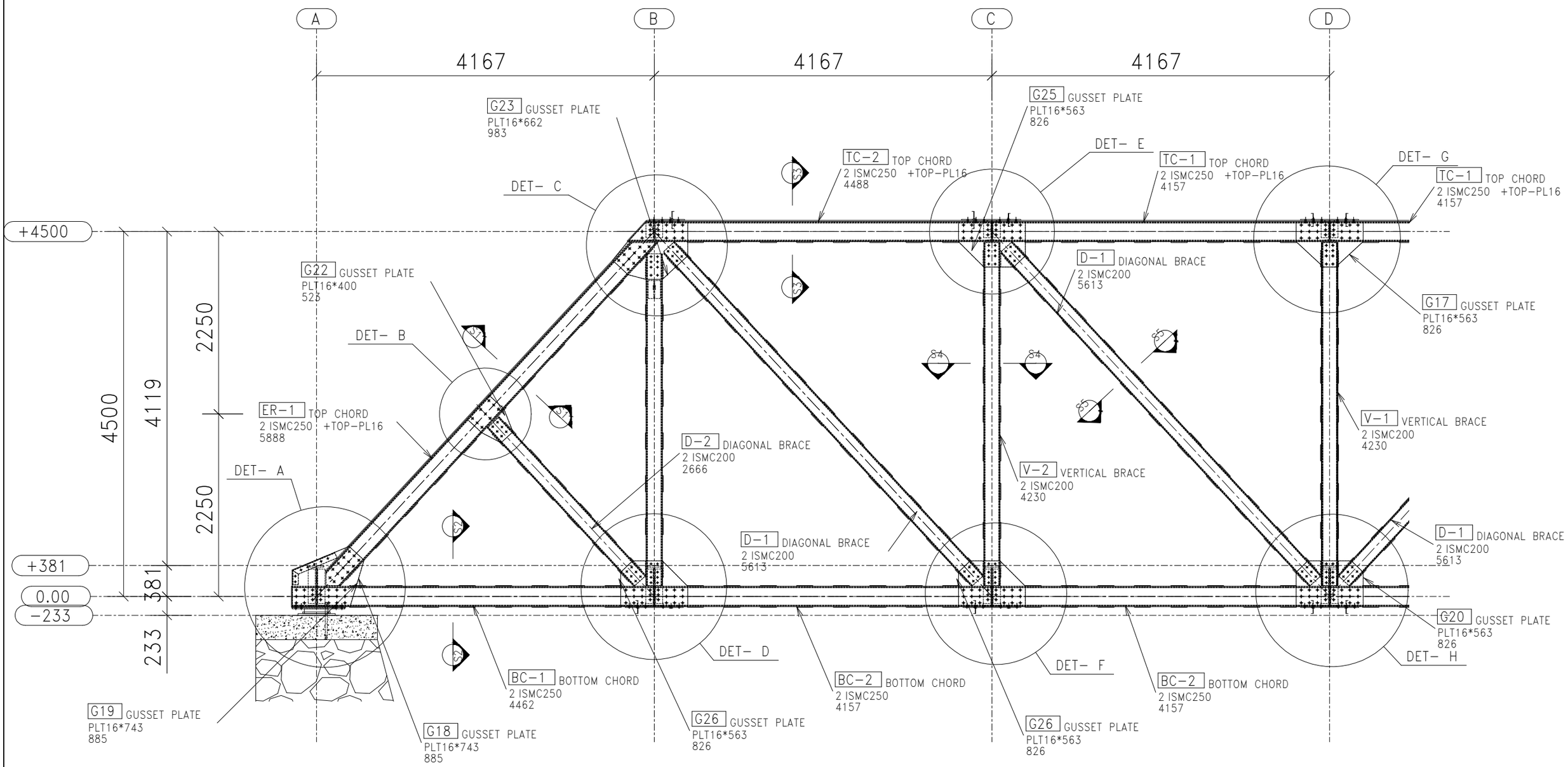


ELEVATION OF BRIDGE (MIRROR HALF SPAN )

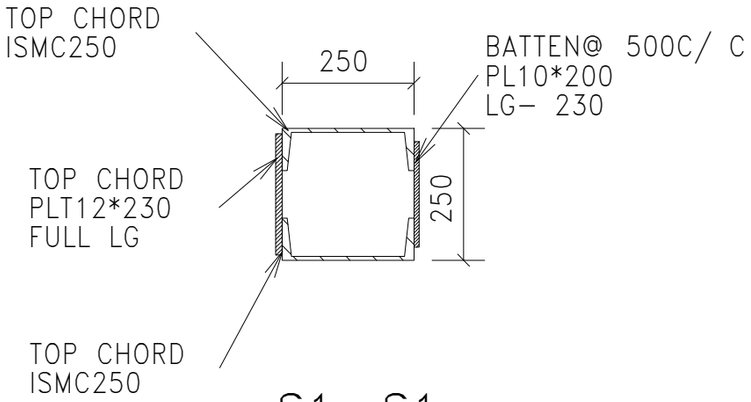


S1 - S1

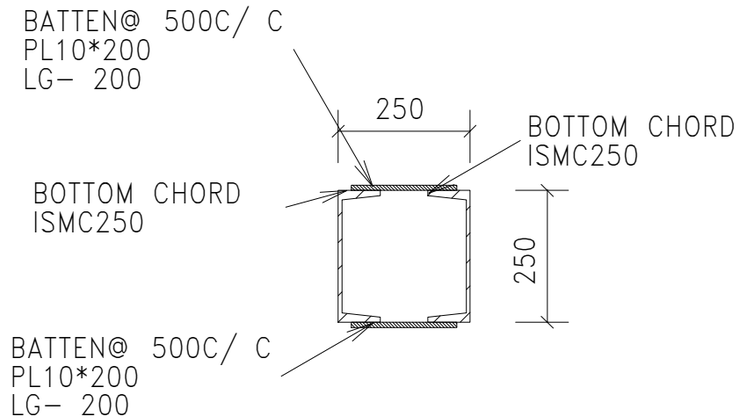


S2 - S2

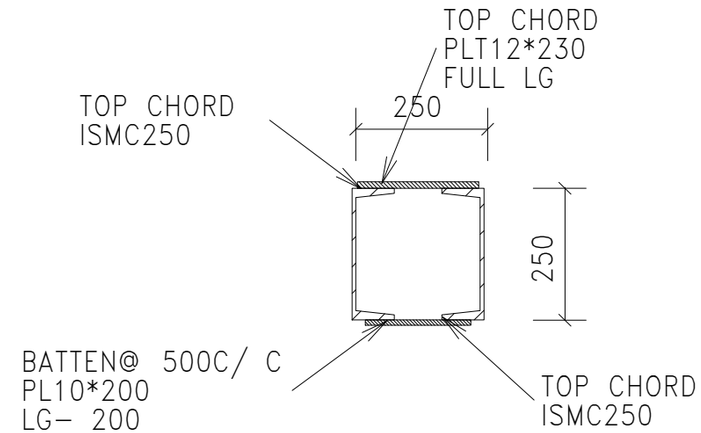


S3 - S3

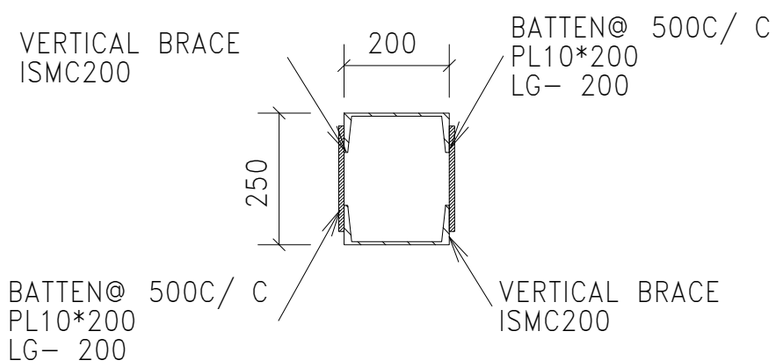


S4 - S4

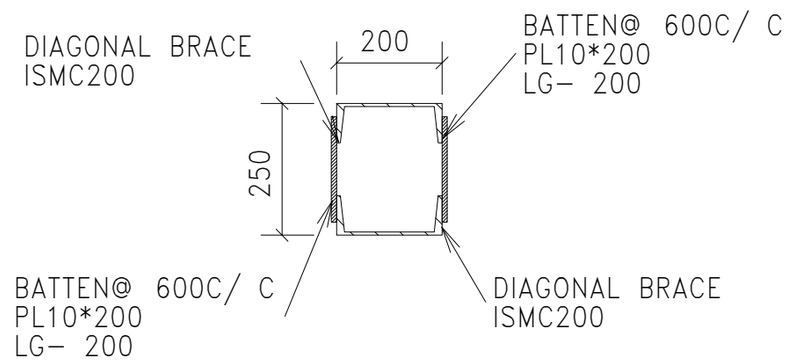


S5 - S5

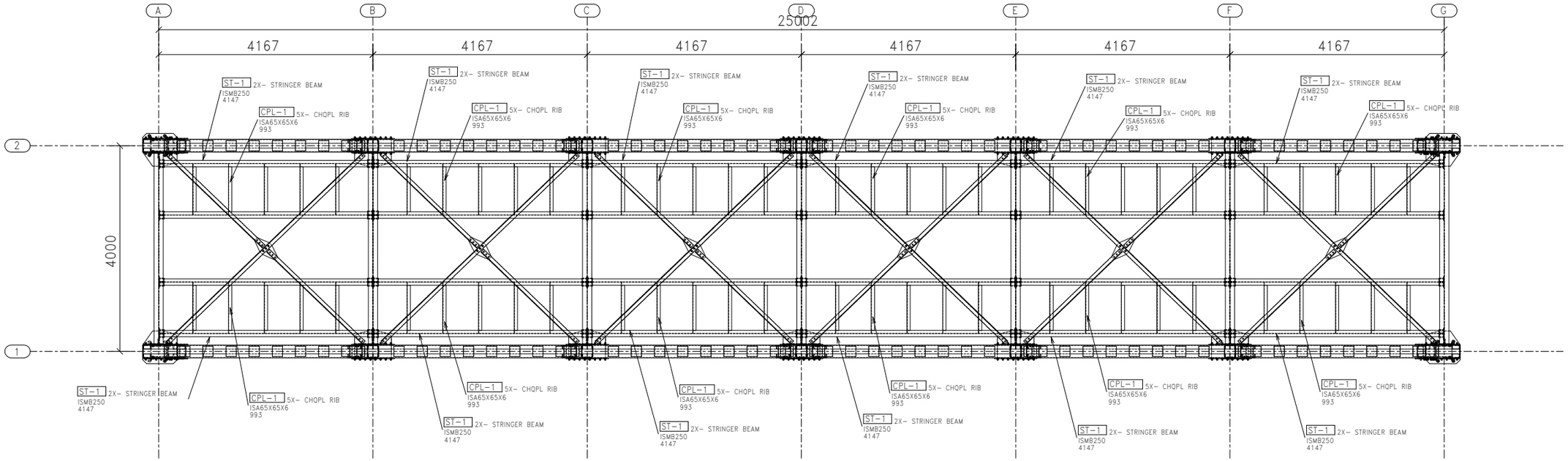


STRINGER PLAN VIEW OF BRIDGE

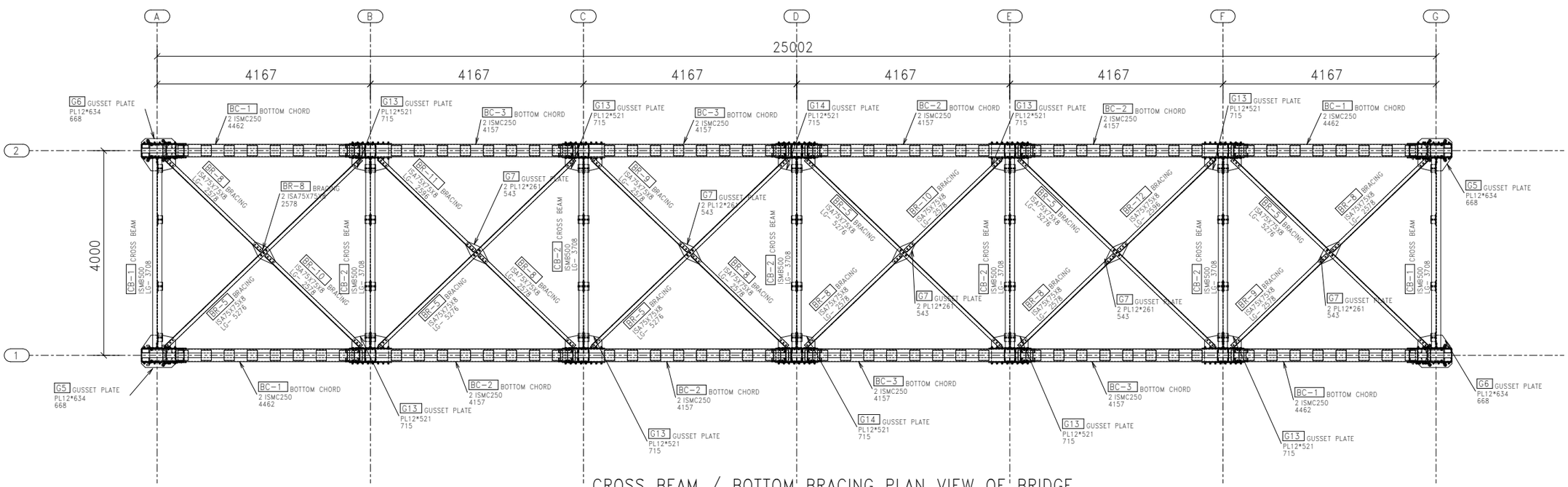


CROSS BEAM / BOTTOM BRACING PLAN VIEW OF BRIDGE

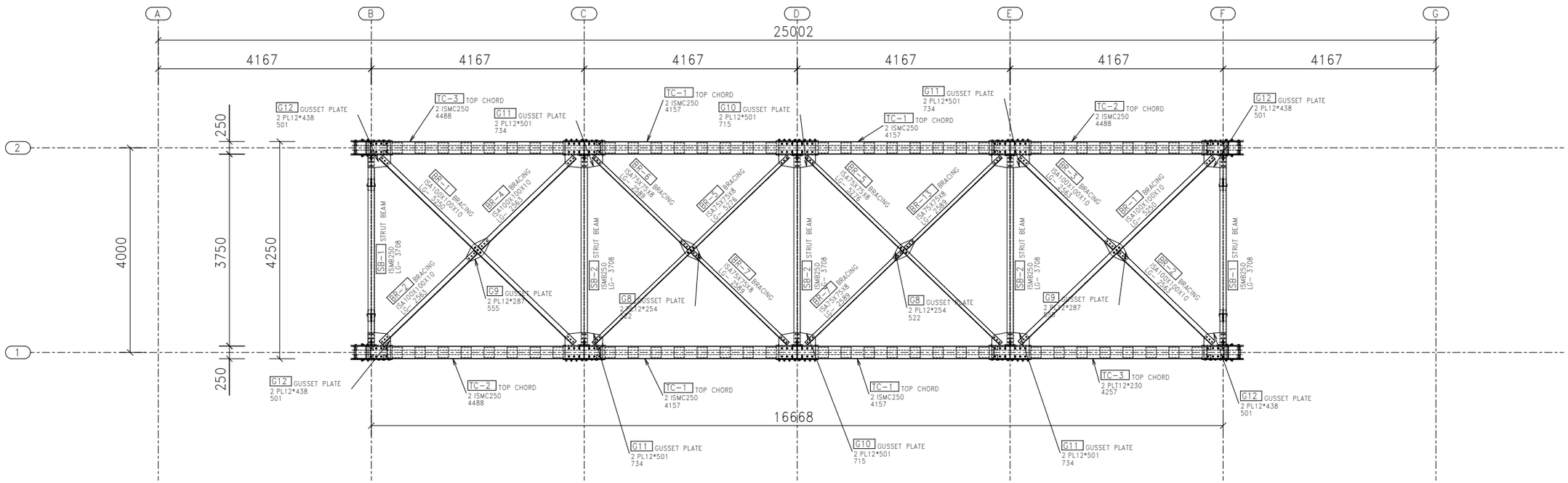


STRUT BEAM / TOP BRACING PLAN VIEW OF BRIDGE

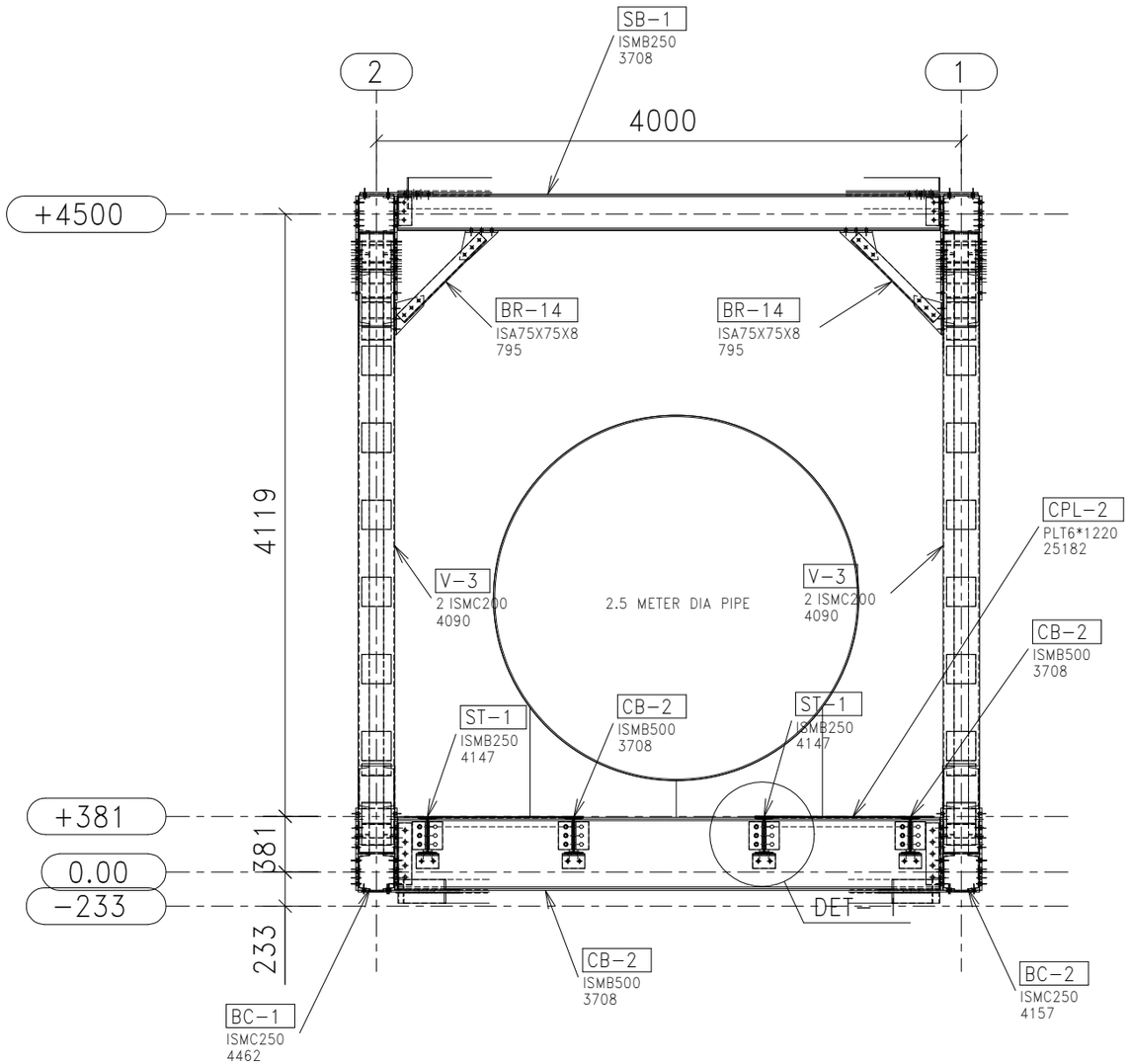


SECTION OF BRIDGE AT GRID A AND G

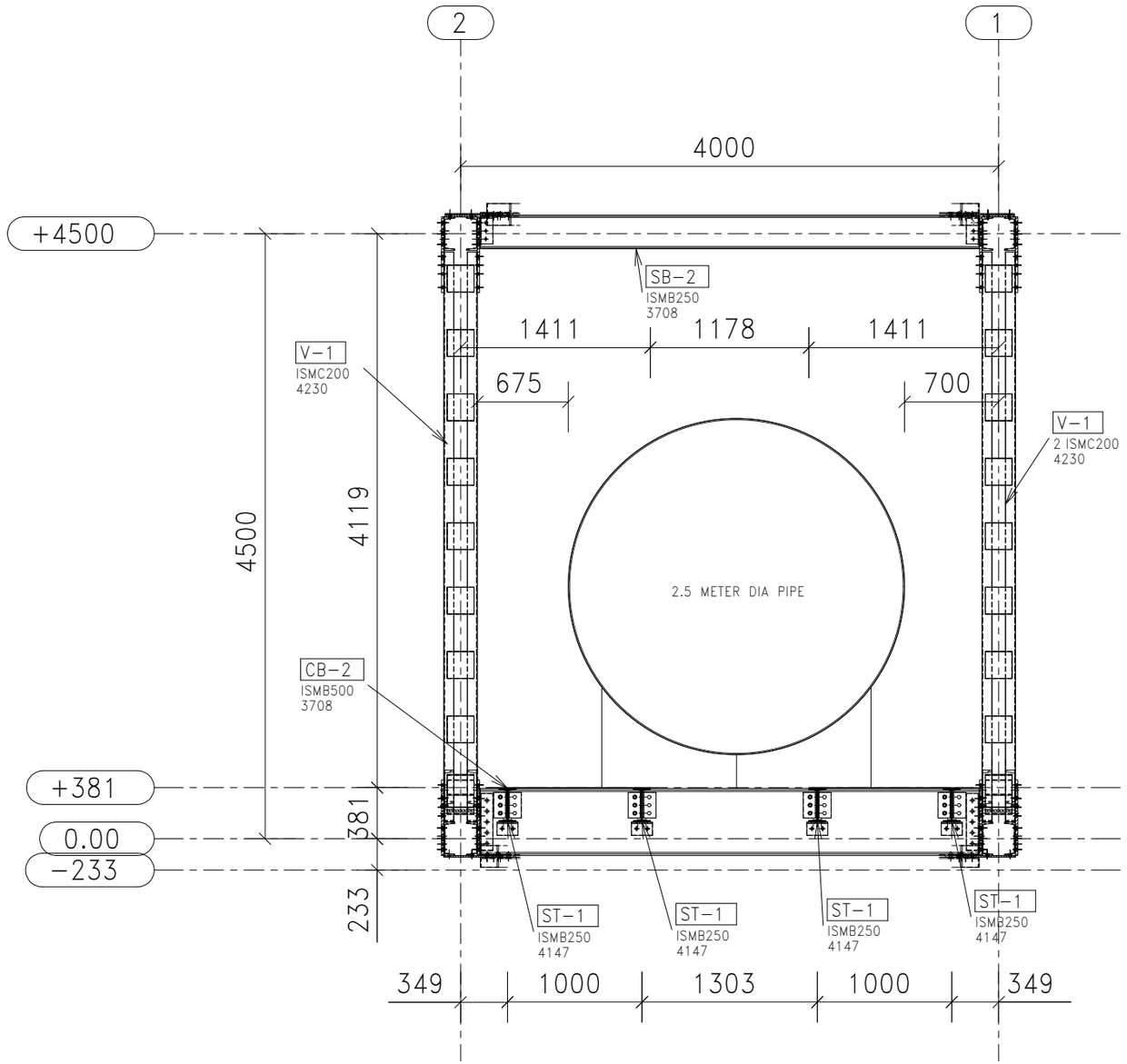


SECTION OF BRIDGE AT GRID B,C,D,E AND F

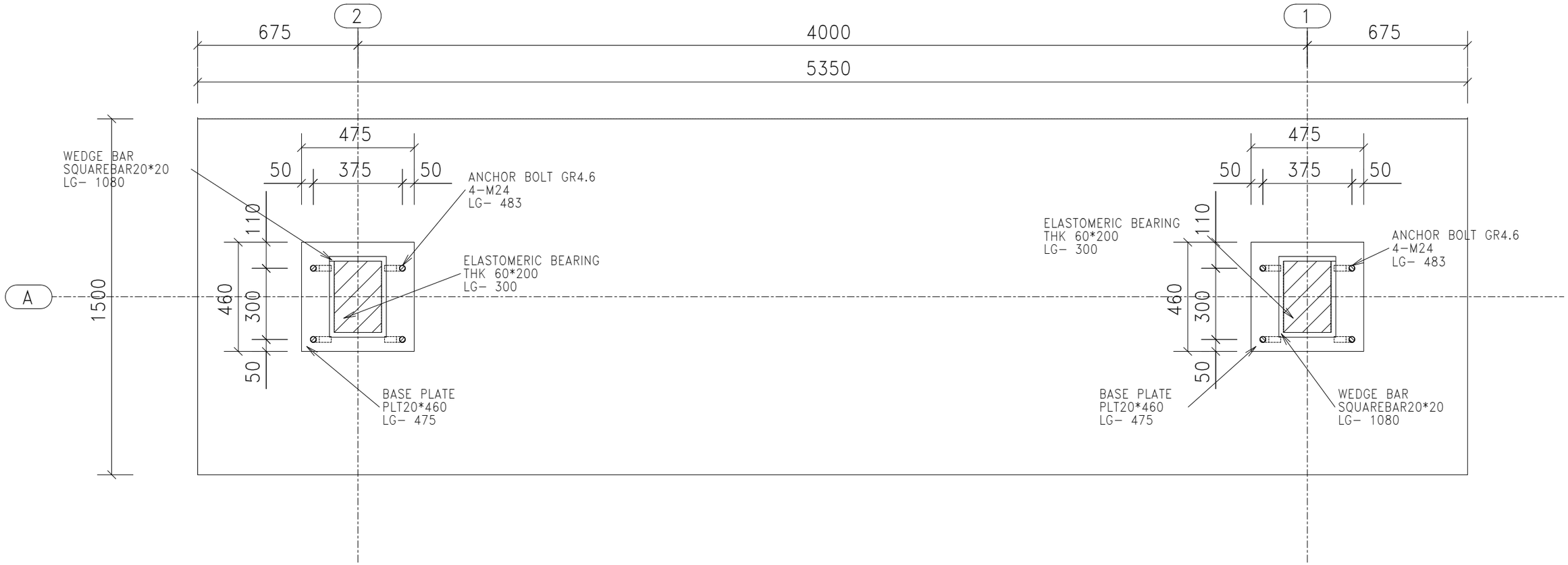


TYP. BEARING PLAN TOP VIEW

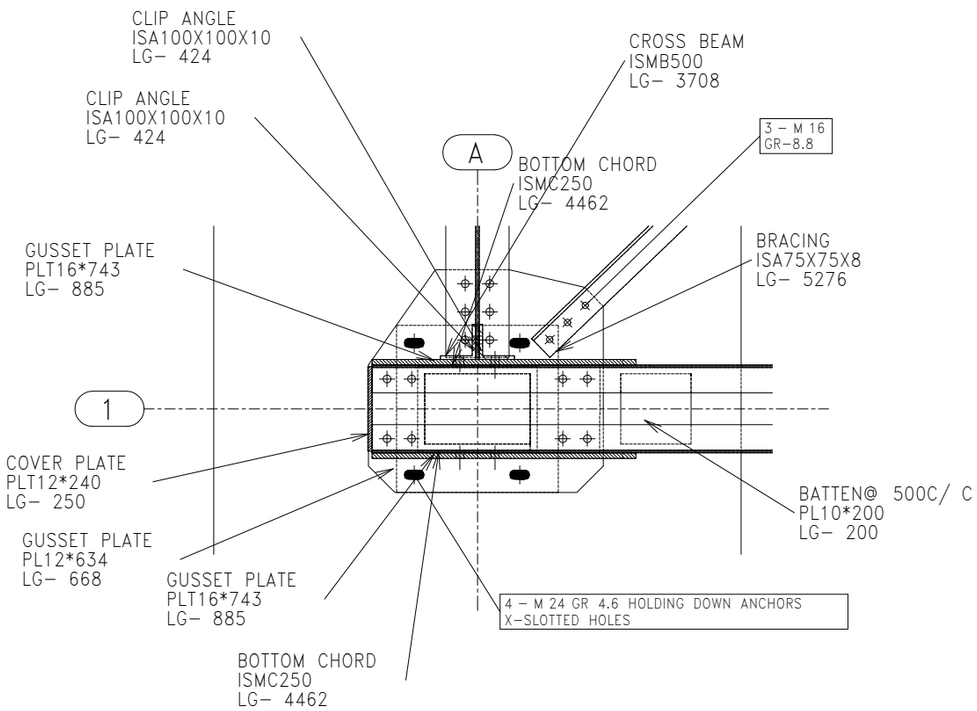
CLIP ANGLE
ISA100X100X10
LG- 424
CLIP ANGLE
ISA100X100X10
LG- 424
CROSS BEAM
ISMB500
LG- 3708
3 - M 16
GR-8.8
A
BOTTOM CHORD
ISMC250
LG- 4462
GUSSET PLATE
PLT16*743
LG- 885
BRACING
ISA75X75X8
LG- 5276
1
COVER PLATE
PLT12*240
LG- 250
GUSSET PLATE
PL12*634
LG- 668
GUSSET PLATE
PLT16*743
LG- 885
BATTEN@ 500C/ C
PL10*200
LG- 200
4 - M 24 GR 4.6 HOLDING DOWN ANCHORS
X-SLOTTED HOLES
BOTTOM CHORD
ISMC250
LG- 4462

2 - 2

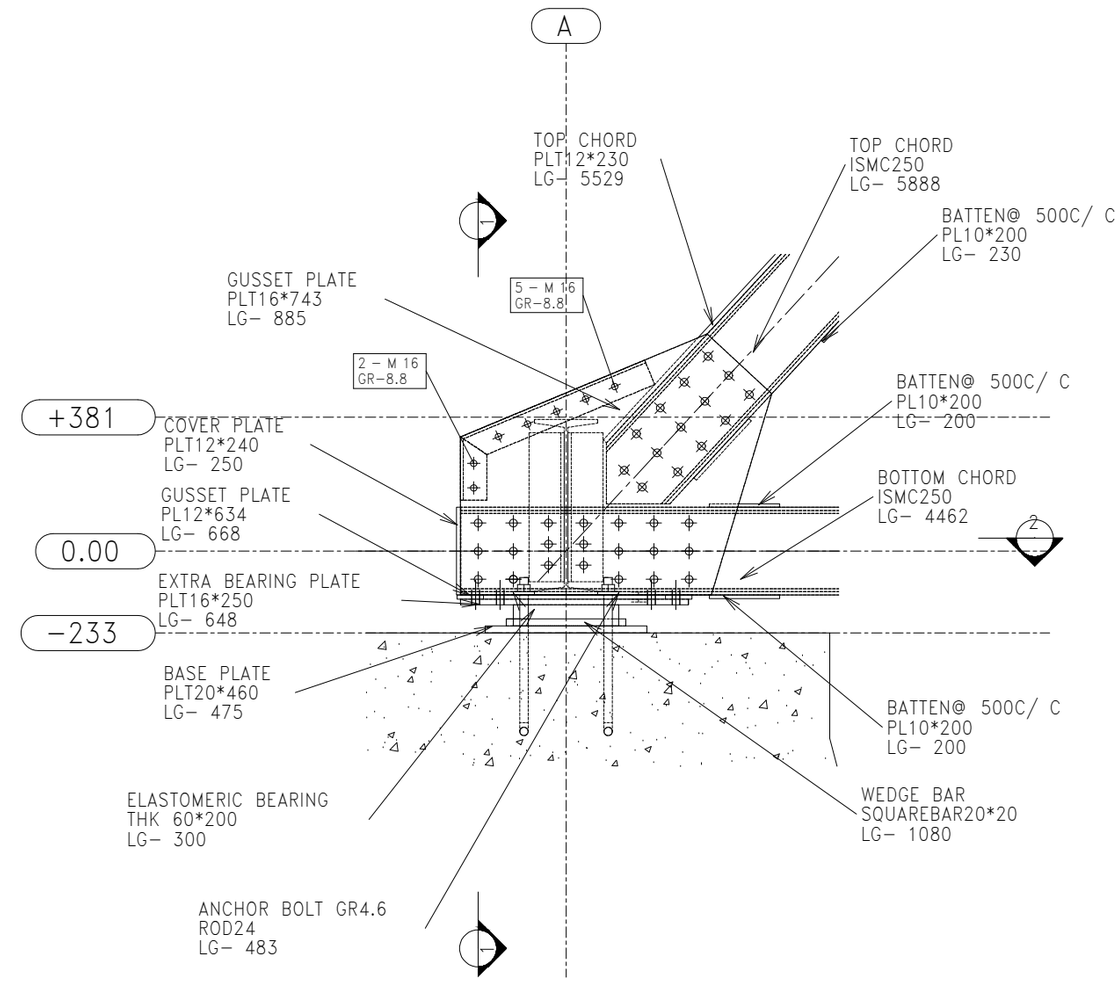
A
TOP CHORD
PLT12*230
LG- 5529
TOP CHORD
ISMC250
LG- 5888
BATTEN@ 500C/ C
PL10*200
LG- 230
GUSSET PLATE
PLT16*743
LG- 885
5 - M 16
GR-8.8
2 - M 16
GR-8.8
+381
COVER PLATE
PLT12*240
LG- 250
BATTEN@ 500C/ C
PL10*200
LG- 200
GUSSET PLATE
PL12*634
LG- 668
BOTTOM CHORD
ISMC250
LG- 4462
0.00
EXTRA BEARING PLATE
PLT16*250
LG- 648
-233
BASE PLATE
PLT20*460
LG- 475
BATTEN@ 500C/ C
PL10*200
LG- 200
ELASTOMERIC BEARING
THK 60*200
LG- 300
WEDGE BAR
SQUAREBAR20*20
LG- 1080
ANCHOR BOLT GR4.6
ROD24
LG- 483

DETAIL - A

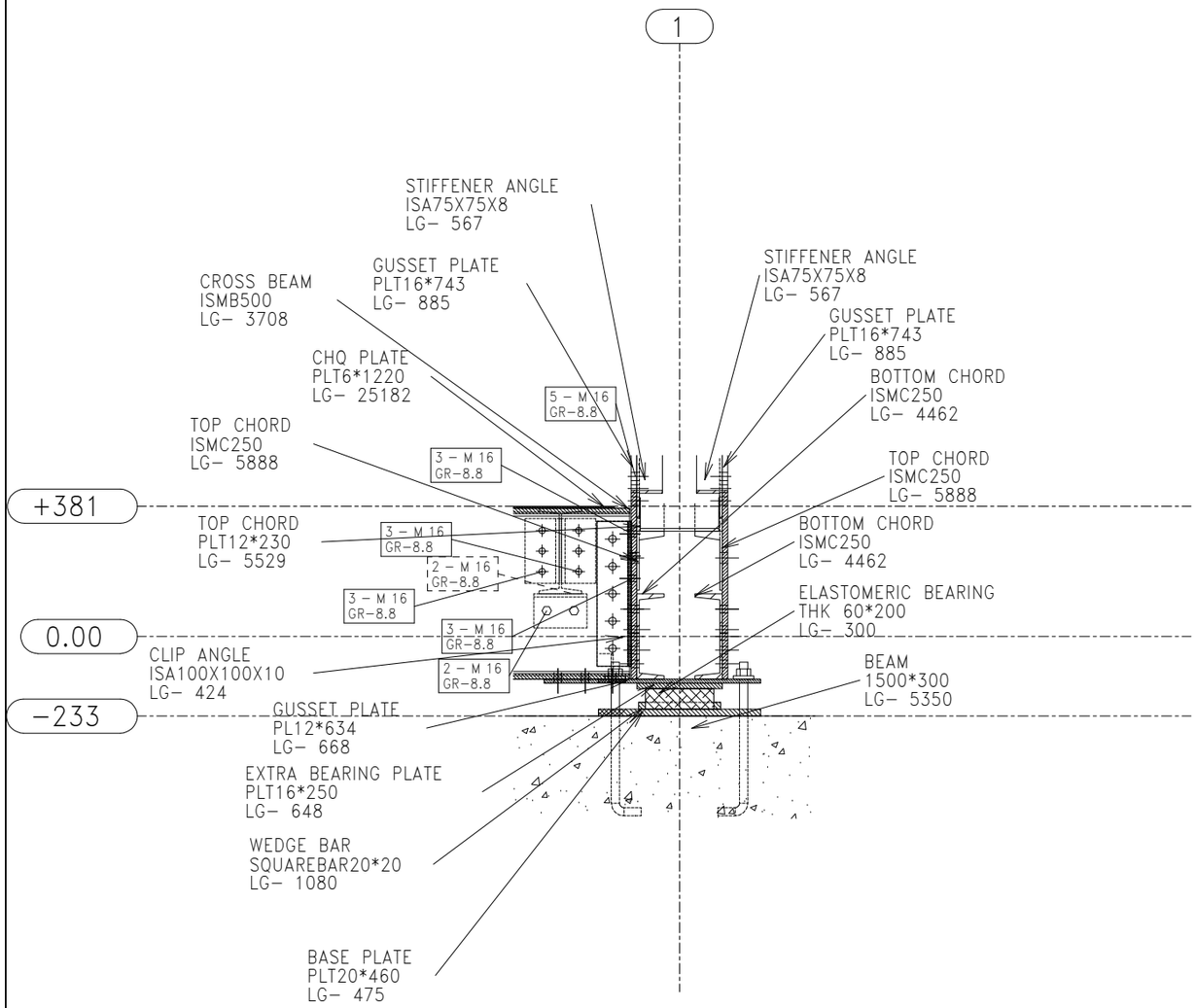


1 - 1

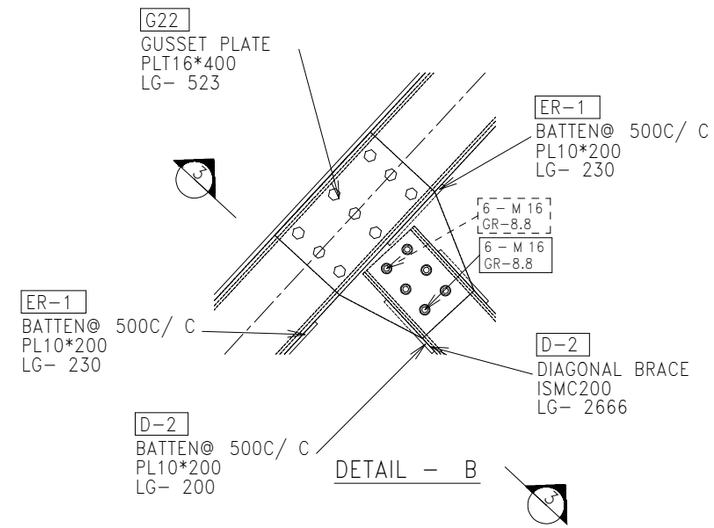


DETAIL - B

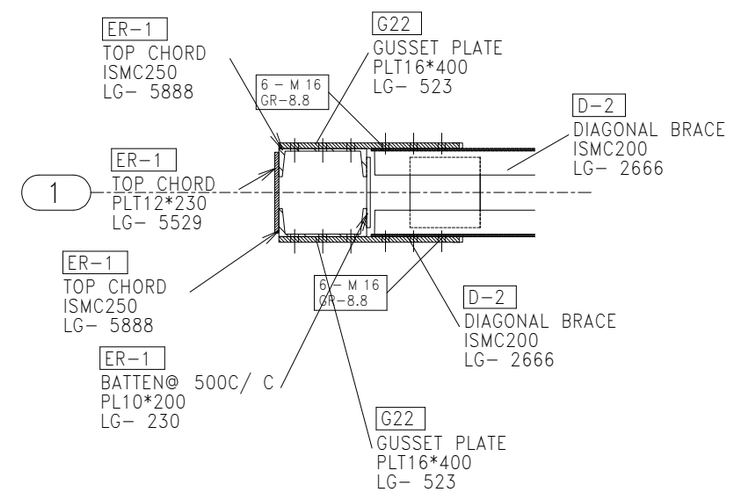


3 - 3

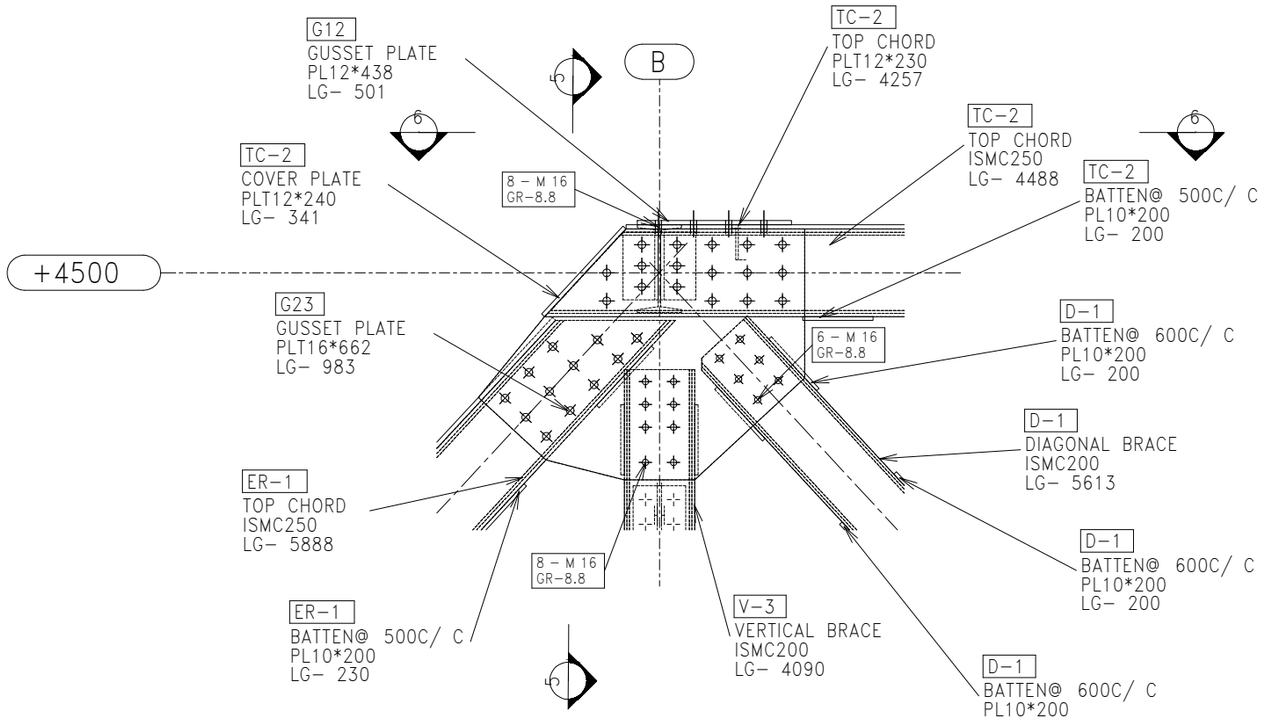


DETAIL - C

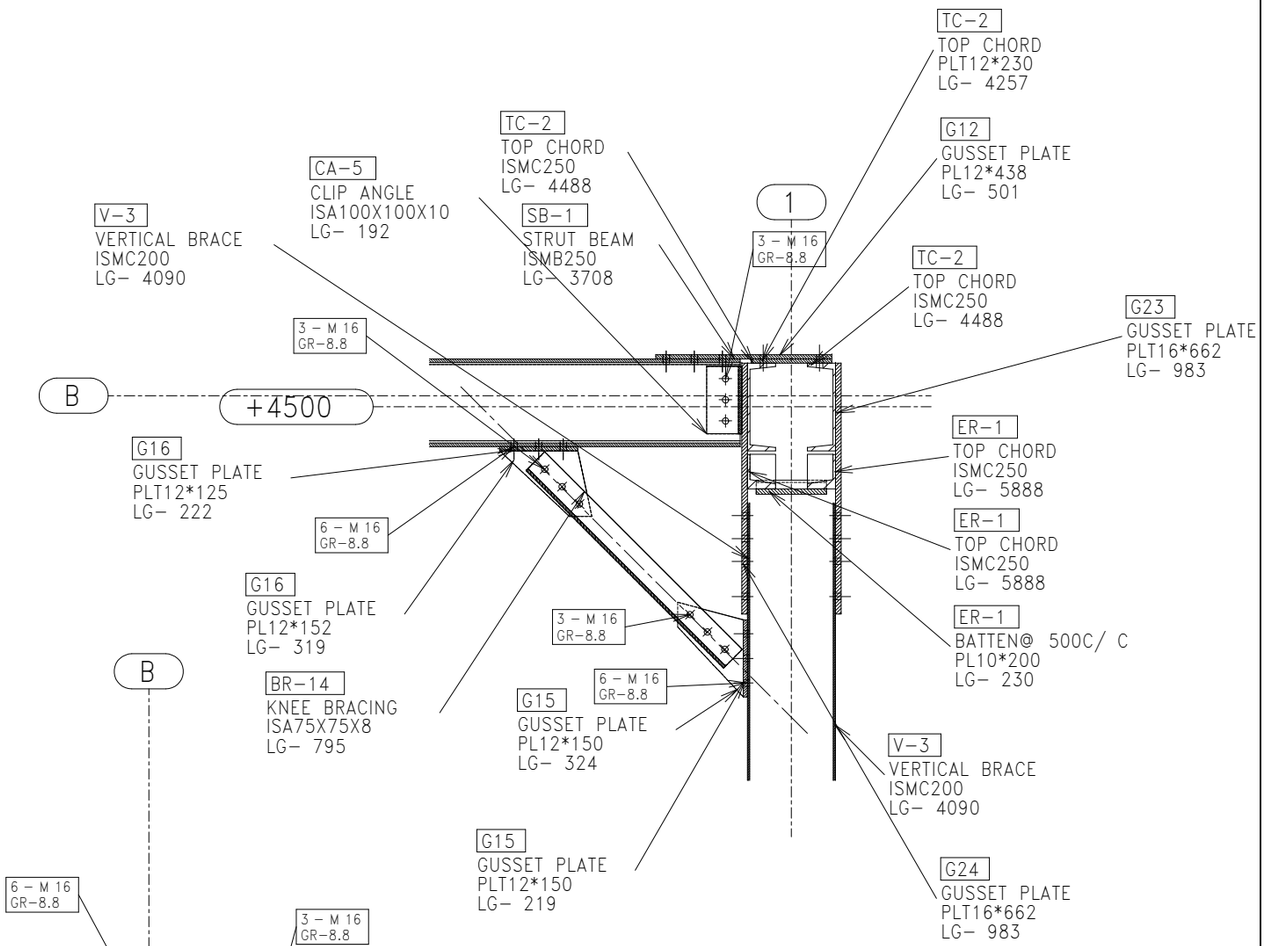


5 - 5

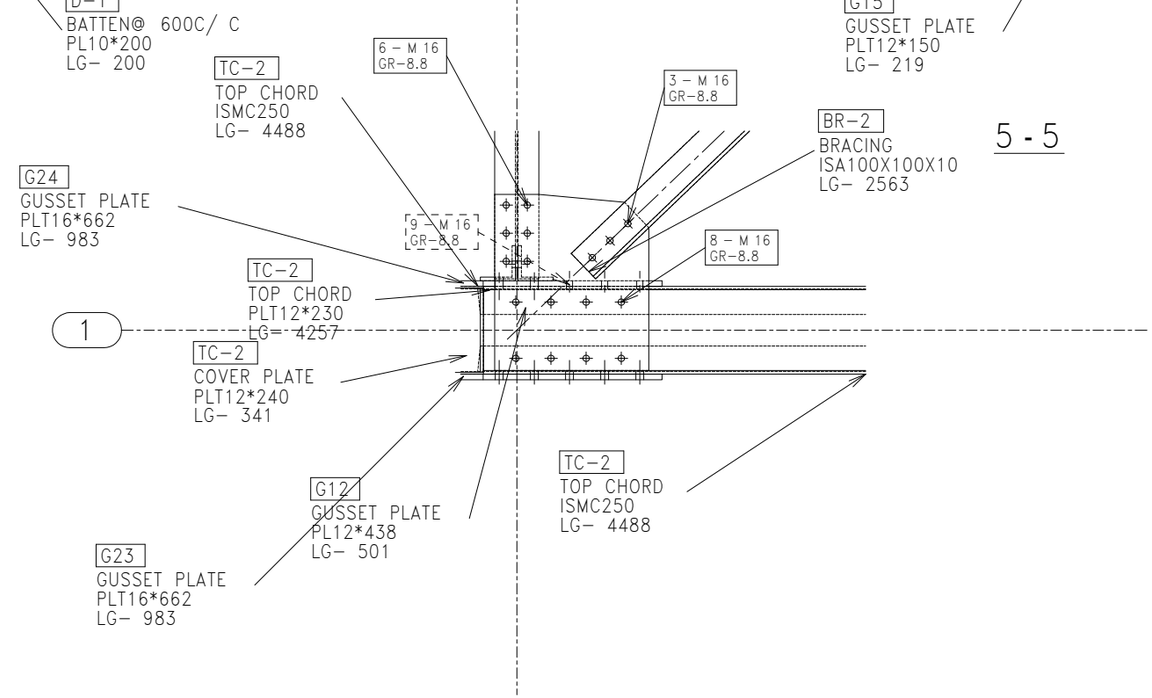


6 - 6

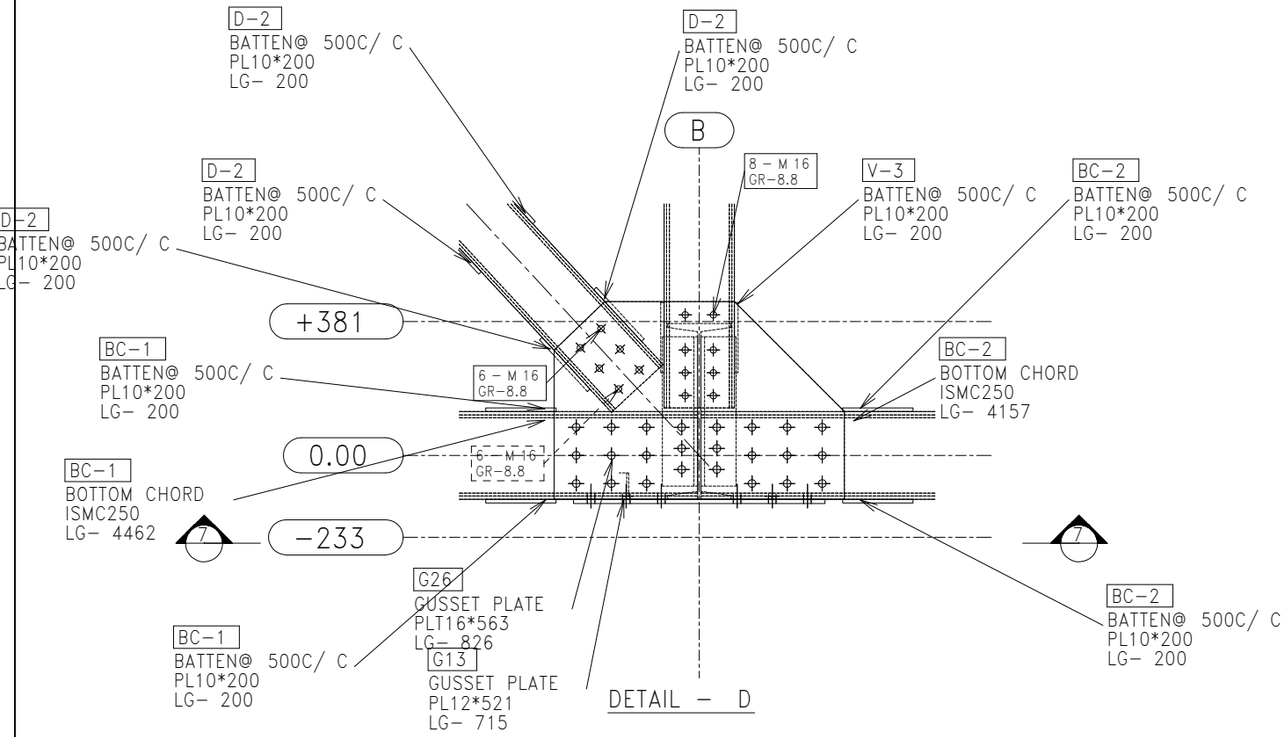


DETAIL - D

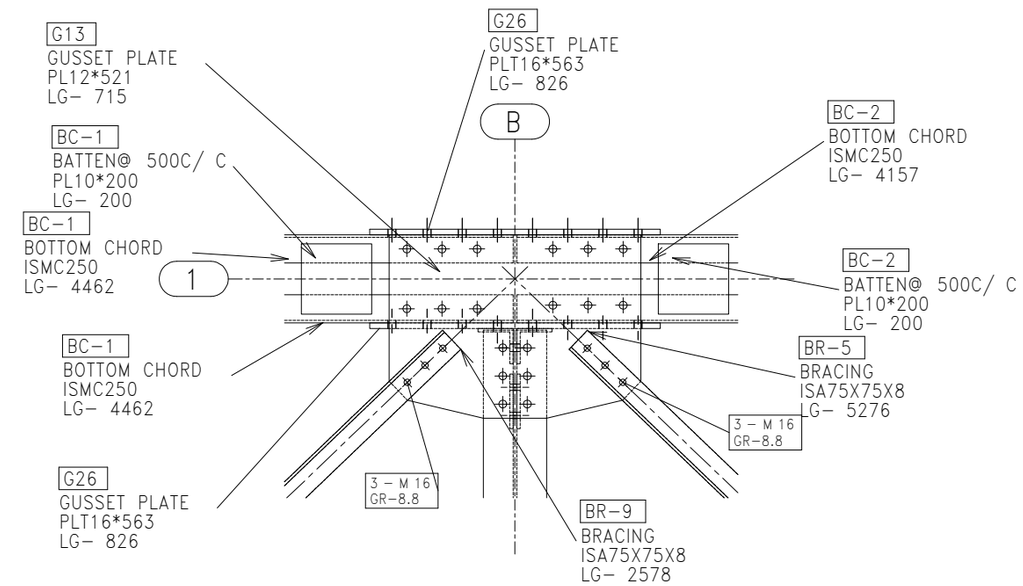


7 - 7

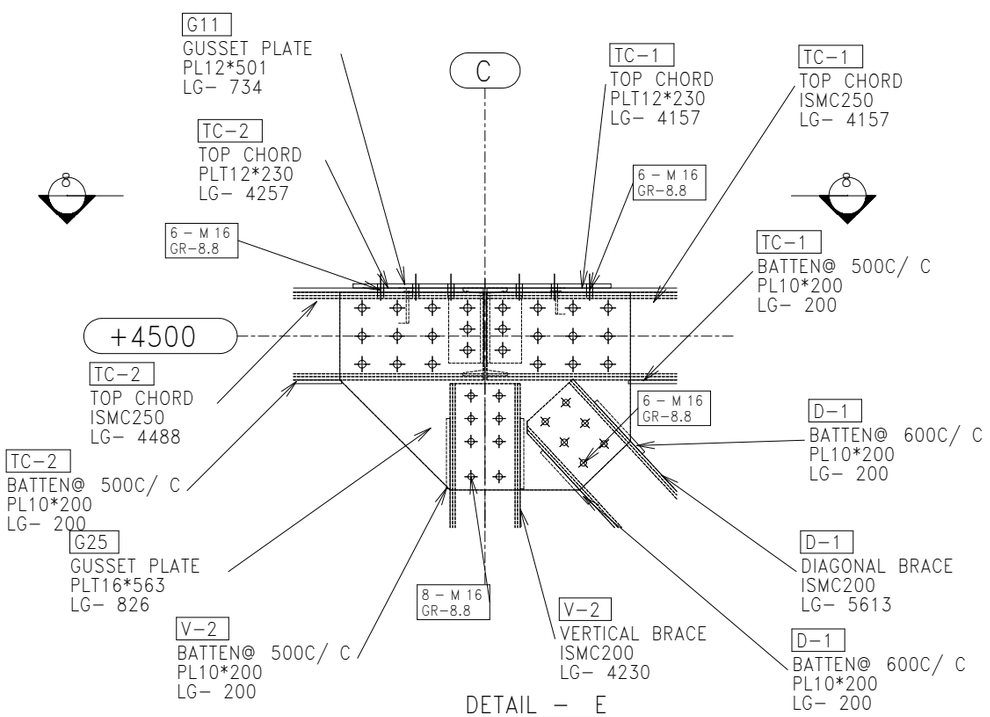


DETAIL - E

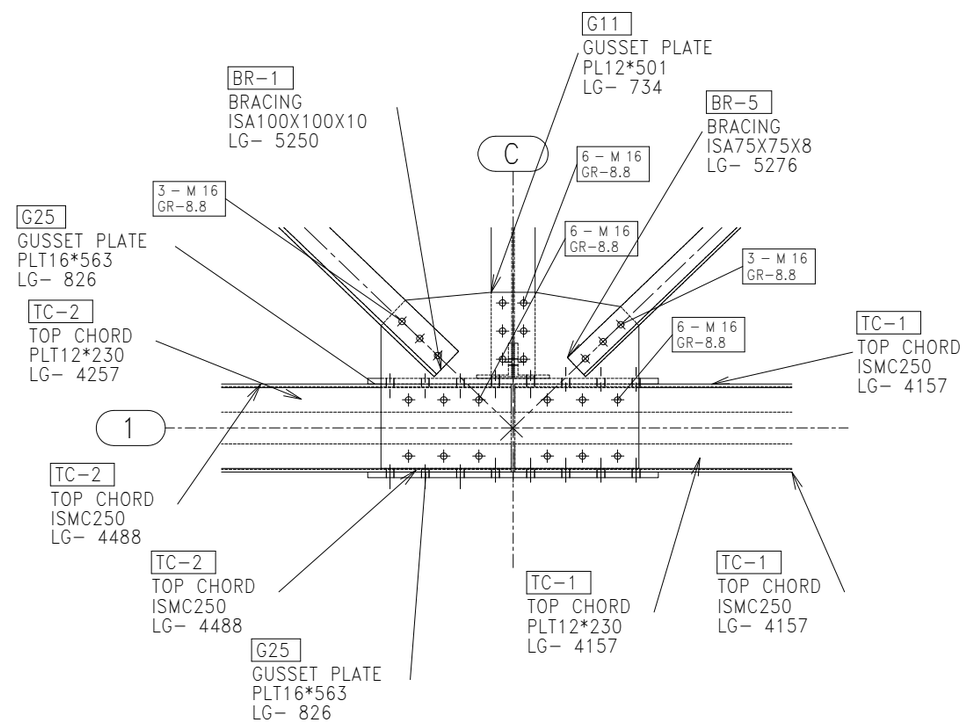


8 - 8

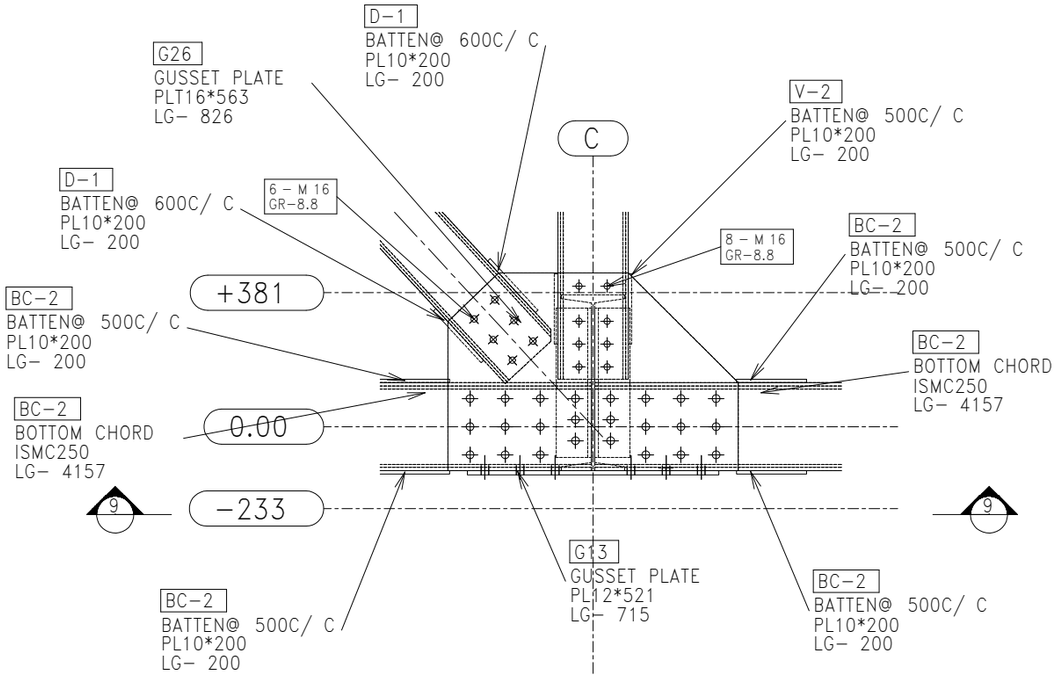


DETAIL - F

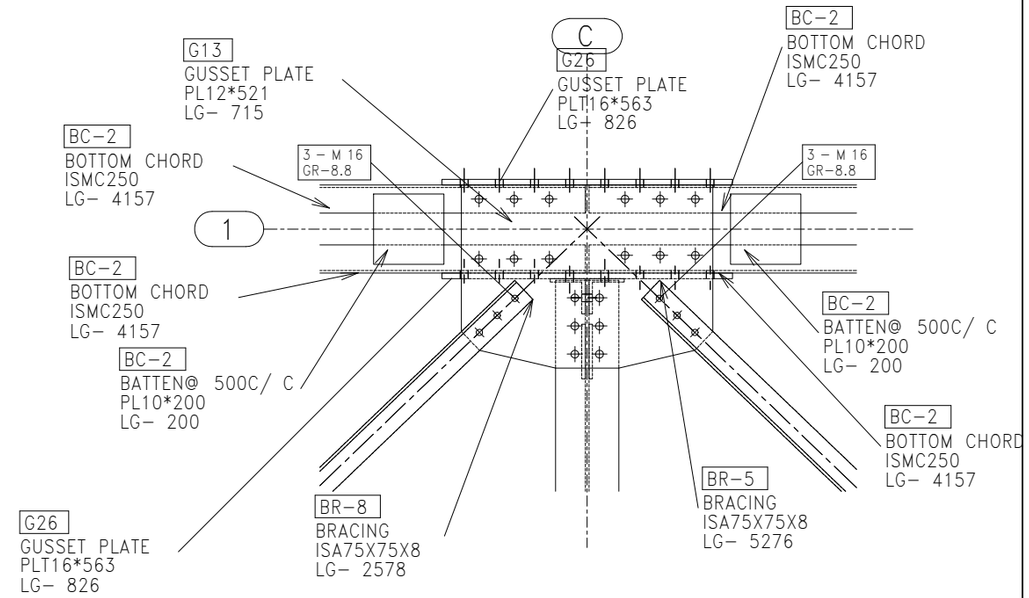


9 - 9

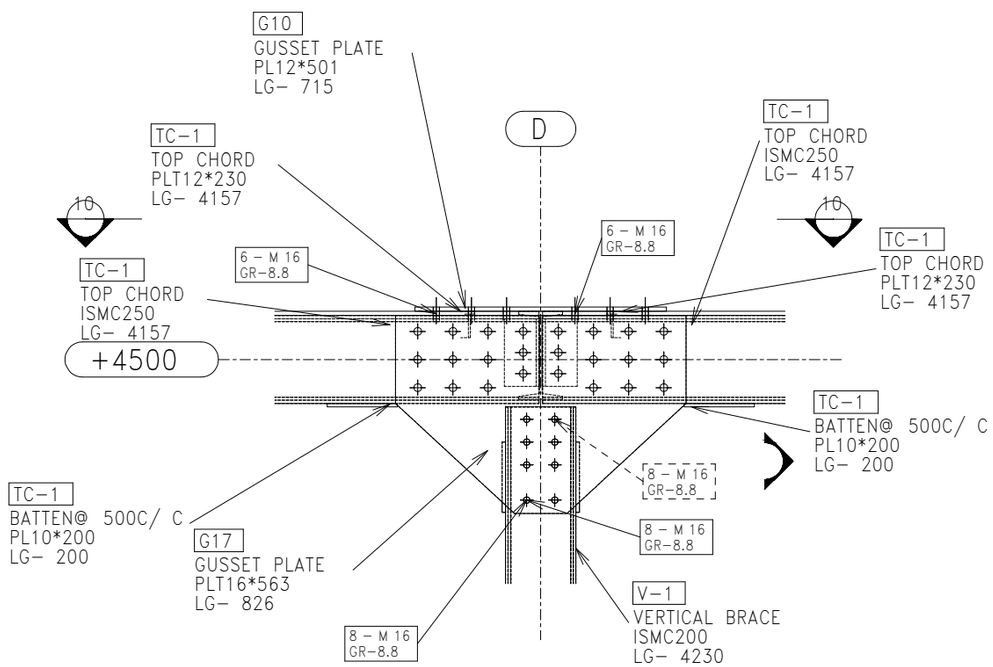


DETAIL - G

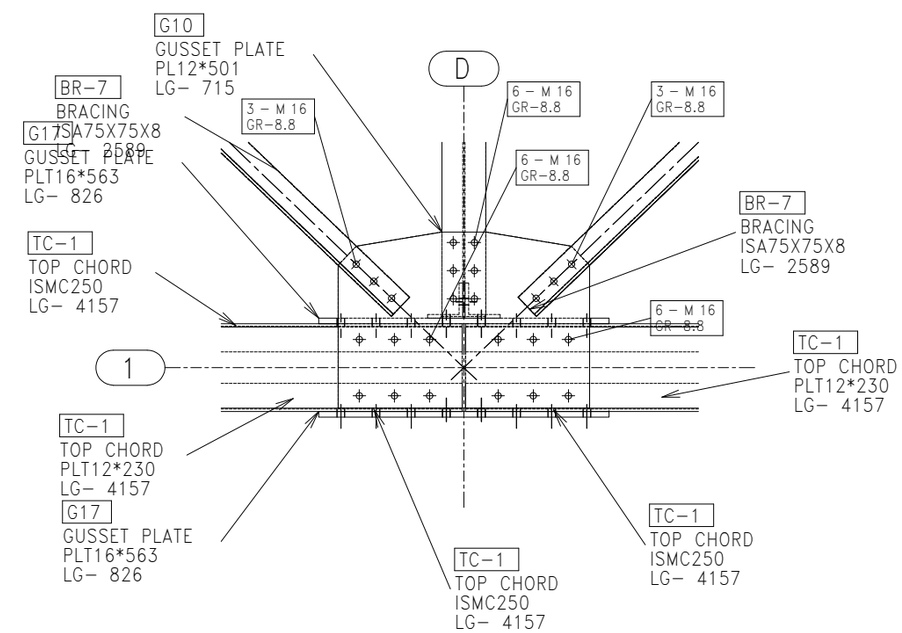


10 - 10

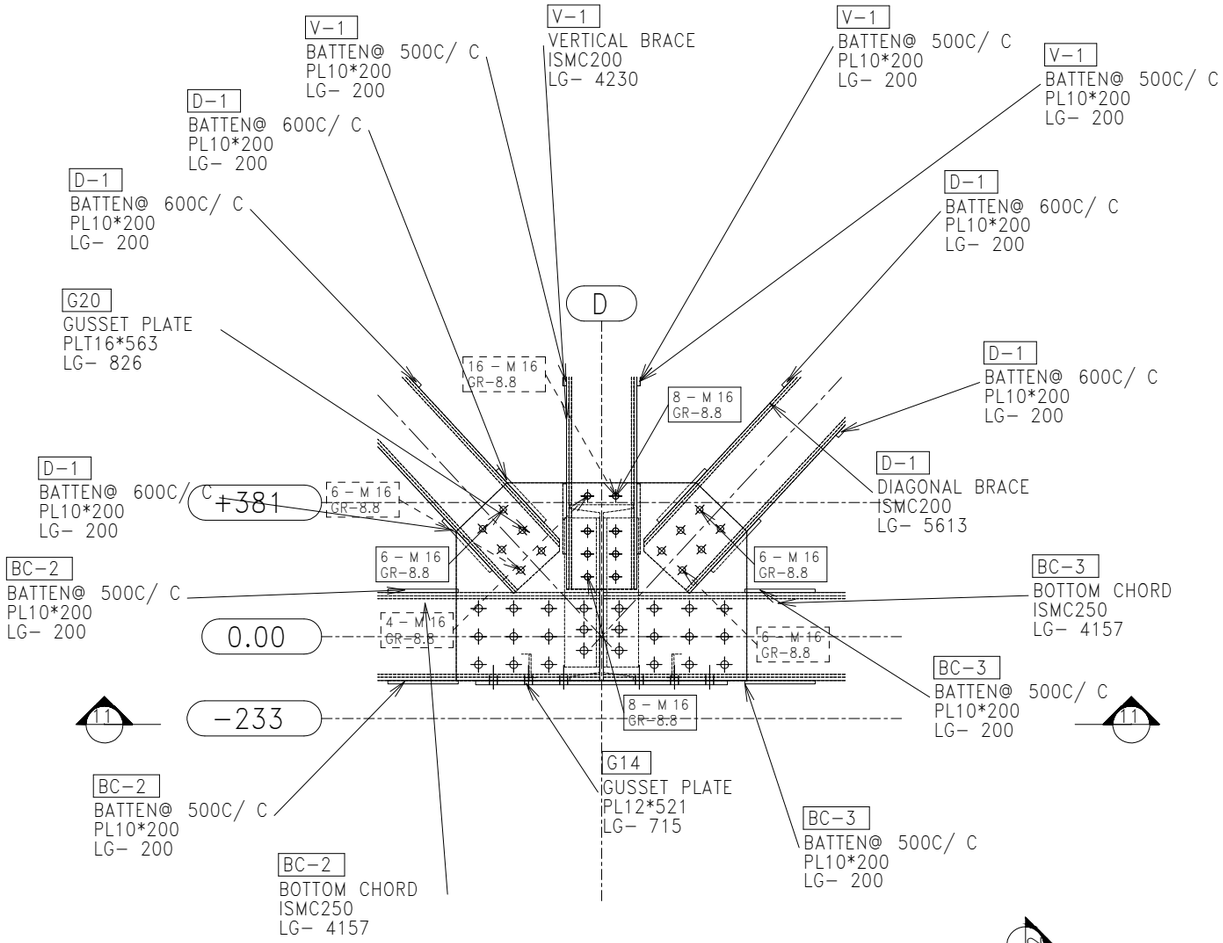


DETAIL - H

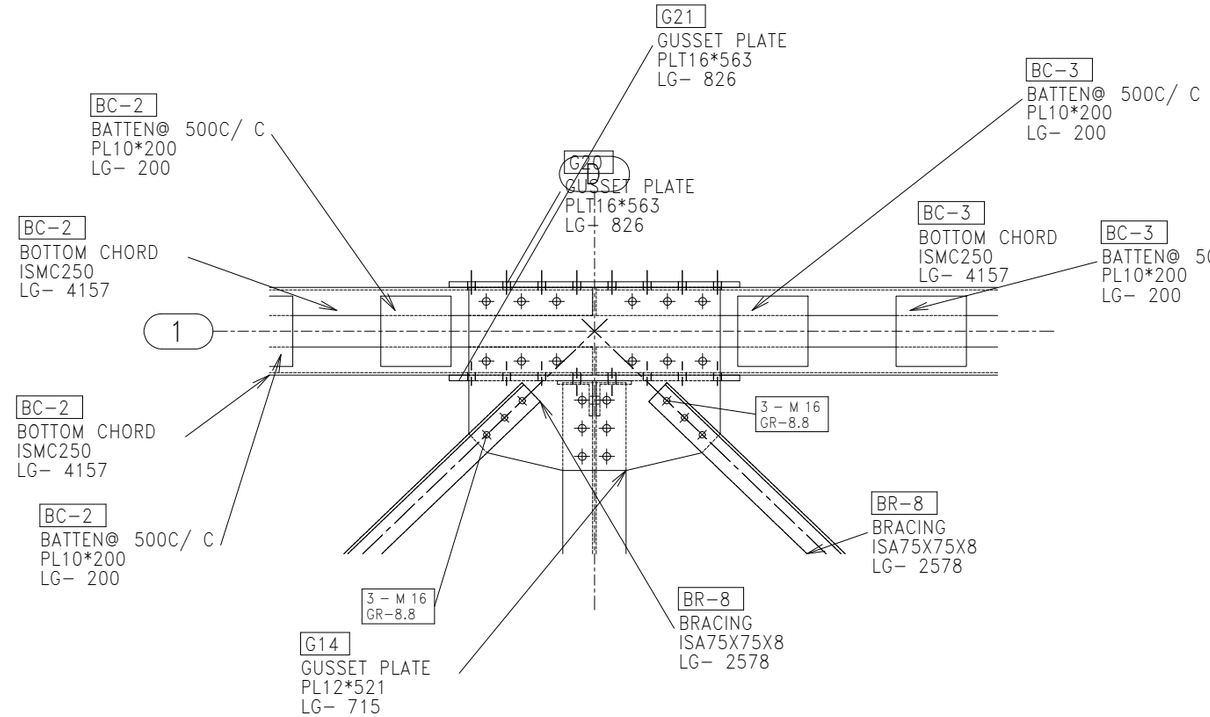


11 - 11

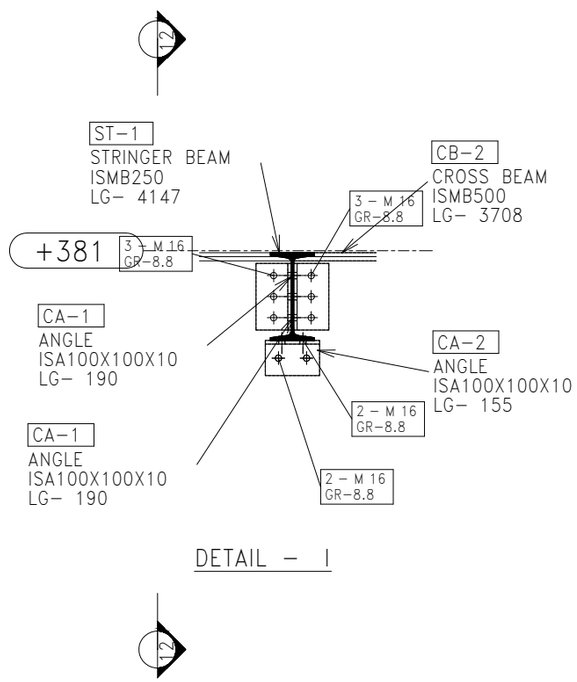


DETAIL - I

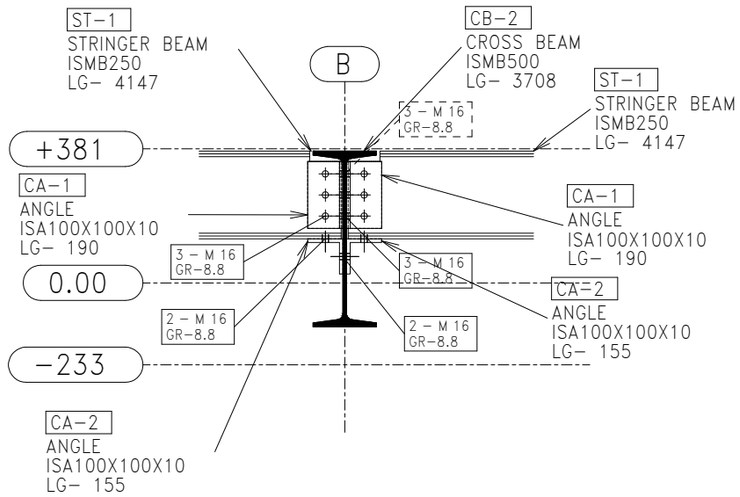


12 - 12

# SINGLE PART LIST

| PartPos | DESCRIPTION | Profile | No. | Material | LG(MM) | WIDTH(MM) | THK(MM) | UNIT WT(Kg) | WT / PIECE(Kg) | TOTAL WTKG) |
|---|---|---|---|---|---|---|---|---|---|---|
| 3001 | ANGLE | ISA100X100X10 | 96 | IS2062 | 190 | | | 14.9 | 2.83 | 271.68 |
| 3002 | ANGLE | ISA100X100X10 | 48 | IS2062 | 155 | | | 14.9 | 2.31 | 110.88 |
| M1 | BRACING | ISA100X100X10 | 4 | IS2062 | 5250 | | | 14.9 | 78.23 | 312.92 |
| M2 | BRACING | ISA100X100X10 | 4 | IS2062 | 2563 | | | 14.9 | 38.19 | 152.76 |
| M3 | BRACING | ISA100X100X10 | 2 | IS2062 | 2563 | | | 14.9 | 38.19 | 76.38 |
| M4 | BRACING | ISA100X100X10 | 1 | IS2062 | 2563 | | | 14.9 | 38.19 | 38.19 |
| M5 | BRACING | ISA75X75X8 | 16 | IS2062 | 5276 | | | 8.9 | 46.96 | 751.36 |
| M6 | BRACING | ISA75X75X8 | 2 | IS2062 | 2589 | | | 8.9 | 23.04 | 46.08 |
| M7 | BRACING | ISA75X75X8 | 4 | IS2062 | 2589 | | | 8.9 | 23.04 | 92.16 |
| M8 | BRACING | ISA75X75X8 | 12 | IS2062 | 2578 | | | 8.9 | 22.94 | 275.28 |
| M9 | BRACING | ISA75X75X8 | 4 | IS2062 | 2578 | | | 8.9 | 22.94 | 91.76 |
| M10 | BRACING | ISA75X75X8 | 4 | IS2062 | 2578 | | | 8.9 | 22.94 | 91.76 |
| M11 | BRACING | ISA75X75X8 | 2 | IS2062 | 2596 | | | 8.9 | 23.10 | 46.20 |
| M12 | BRACING | ISA75X75X8 | 2 | IS2062 | 2596 | | | 8.9 | 23.10 | 46.20 |
| M13 | BRACING | ISA75X75X8 | 2 | IS2062 | 2589 | | | 8.9 | 23.04 | 46.08 |
| M14 | KNEE BRACING | ISA75X75X8 | 8 | IS2062 | 795 | | | 8.9 | 7.08 | 56.64 |
| M15 | STIFFENER ANGLE | ISA75X75X8 | 4 | IS2062 | 567 | | | 8.9 | 5.05 | 20.20 |
| M16 | STIFFENER ANGLE | ISA75X75X8 | 4 | IS2062 | 567 | | | 8.9 | 5.05 | 20.20 |
| M17 | STIFFENER ANGLE | ISA75X75X8 | 4 | IS2062 | 180 | | | 8.9 | 1.60 | 6.40 |
| M19 | STIFFENER ANGLE | ISA75X75X8 | 4 | IS2062 | 180 | | | 34.2 | 6.16 | 24.64 |
| M20 | TOP CHORD | ISMC250 | 2 | IS2062 | 5888 | | | 34.2 | 201.37 | 402.74 |
| M21 | TOP CHORD | ISMC250 | 2 | IS2062 | 5888 | | | 34.2 | 201.37 | 402.74 |
| M22 | BOTTOM CHORD | ISMC250 | 4 | IS2062 | 4462 | | | 34.2 | 152.60 | 610.40 |
| M23 | BOTTOM CHORD | ISMC250 | 4 | IS2062 | 4462 | | | 34.2 | 152.60 | 610.40 |
| M24 | BOTTOM CHORD | ISMC250 | 8 | IS2062 | 4157 | | | 34.2 | 142.17 | 1,137.36 |
| M25 | BOTTOM CHORD | ISMC250 | 4 | IS2062 | 4157 | | | 34.2 | 142.17 | 568.68 |
| M26 | BOTTOM CHORD | ISMC250 | 4 | IS2062 | 4157 | | | 34.2 | 142.17 | 568.68 |
| M27 | TOP CHORD | ISMC250 | 2 | IS2062 | 5888 | | | 34.2 | 201.37 | 402.74 |
| M28 | TOP CHORD | ISMC250 | 2 | IS2062 | 5888 | | | 34.2 | 201.37 | 402.74 |
| M29 | TOP CHORD | ISMC250 | 8 | IS2062 | 4157 | | | 34.2 | 142.17 | 1,137.36 |
| M30 | TOP CHORD | ISMC250 | 2 | IS2062 | 4488 | | | 34.2 | 153.49 | 306.98 |
| M31 | TOP CHORD | ISMC250 | 2 | IS2062 | 4488 | | | 34.2 | 153.49 | 306.98 |
| M32 | TOP CHORD | ISMC250 | 2 | IS2062 | 4488 | | | 34.2 | 153.49 | 306.98 |
| M33 | TOP CHORD | ISMC250 | 2 | IS2062 | 4488 | | | 34.2 | 153.49 | 306.98 |
| M34 | EXTRA BEARING PLATE | PLT16*250 | 4 | IS2062 | 648 | 250 | 16 | 7850 | 20.35 | 81.39 |
| M35 | TOP CHORD | PLT12*230 | 4 | IS2062 | 5529 | 230 | 12 | 7850 | 119.79 | 479.17 |
| M36 | TOP CHORD | PLT12*230 | 4 | IS2062 | 4157 | 230 | 12 | 7850 | 90.07 | 360.26 |
| M37 | TOP CHORD | PLT12*230 | 4 | IS2062 | 4257 | 230 | 12 | 7850 | 92.23 | 368.93 |
| M38 | COVER PLATE | PLT12*240 | 4 | IS2062 | 341 | 240 | 12 | 7850 | 7.71 | 30.84 |
| M39 | COVER PLATE | PLT12*240 | 4 | IS2062 | 250 | 240 | 12 | 7850 | 5.65 | 22.61 |
| M40 | STRUT BEAM | ISMB250 | 2 | IS2062 | 3708 | | | 37.3 | 138.31 | 276.62 |
| M41 | STRUT BEAM | ISMB250 | 3 | IS2062 | 3708 | | | 37.3 | 138.31 | 414.93 |
| M42 | STRINGER BEAM | ISMB250 | 24 | IS2062 | 4147 | | | 37.3 | 154.68 | 3,712.32 |
| M43 | CROSS BEAM | ISMB500 | 2 | IS2062 | 3708 | | | 86.9 | 322.23 | 644.46 |
| M44 | CROSS BEAM | ISMB500 | 5 | IS2062 | 3708 | | | 86.9 | 322.23 | 1,611.15 |
| M46 | CHQPL RIB | ISA65X65X6 | 60 | IS2062 | 993 | | | 5.8 | 5.76 | 345.60 |

| PartPos | DESCRIPTION | Profile | No. | Material | LG(MM) | WIDTH(MM) | THK(MM) | UNIT WT(Kg) | WT / PIECE(Kg) | TOTAL WTKG) |
|---|---|---|---|---|---|---|---|---|---|---|
| M47 | WEDGE BAR | SQUAREBAR20* | 4 | IS2062 | 1080 | 20 | 20 | 7850 | 3.39 | 13.56 |
| M48 | BRACING | ISA100X100X10 | 1 | IS2062 | 2563 | | | 14.9 | 38.19 | 38.19 |
| M49 | BASE PLATE | PLT20*460 | 4 | IS2062 | 475 | 460 | 20 | 7850 | 34.30 | 137.22 |
| M50 | VERTICAL BRACE | ISMC200 | 4 | IS2062 | 4230 | | | 24.3 | 102.79 | 411.16 |
| M51 | VERTICAL BRACE | ISMC200 | 12 | IS2062 | 4230 | | | 24.3 | 102.79 | 1,233.48 |
| M52 | VERTICAL BRACE | ISMC200 | 4 | IS2062 | 4090 | | | 24.3 | 99.39 | 397.56 |
| M53 | VERTICAL BRACE | ISMC200 | 4 | IS2062 | 4090 | | | 24.3 | 99.39 | 397.56 |
| M54 | DIAGONAL BRACE | ISMC200 | 8 | IS2062 | 5613 | | | 24.3 | 136.40 | 1,091.20 |
| M55 | DIAGONAL BRACE | ISMC200 | 8 | IS2062 | 5613 | | | 24.3 | 136.40 | 1,091.20 |
| M56 | DIAGONAL BRACE | ISMC200 | 8 | IS2062 | 2666 | | | 24.3 | 64.78 | 518.24 |
| a1 | CLIP ANGLE | ISA100X100X10 | 2 | IS2062 | 424 | | | 14.9 | 6.32 | 12.64 |
| a2 | CLIP ANGLE | ISA100X100X10 | 2 | IS2062 | 424 | | | 14.9 | 6.32 | 12.64 |
| a3 | CLIP ANGLE | ISA100X100X10 | 20 | IS2062 | 192 | | | 14.9 | 2.86 | 57.20 |
| a4 | CLIP ANGLE | ISA100X100X10 | 12 | IS2062 | 424 | | | 14.9 | 6.32 | 75.84 |
| a5 | CLIP ANGLE | ISA100X100X10 | 12 | IS2062 | 424 | | | 14.9 | 6.32 | 75.84 |
| a6 | BATTEN@600C/C | PL10*200 | 176 | IS2062 | 200 | 200 | 10 | 7850 | 3.14 | 552.64 |
| a7 | BATTEN@500C/C | PL10*200 | 512 | IS2062 | 200 | 200 | 10 | 7850 | 3.14 | 1,607.68 |
| a8 | BATTEN@500C/C | PL10*200 | 44 | IS2062 | 230 | 200 | 10 | 7850 | 3.61 | 158.88 |
| pl1 | GUSSET PLATE | PLT12*150 | 4 | IS2062 | 219 | 150 | 12 | 7850 | 3.09 | 12.38 |
| pl2 | GUSSET PLATE | PLT12*125 | 4 | IS2062 | 222 | 125 | 12 | 7850 | 2.61 | 10.46 |
| pl3 | GUSSET PLATE | PL12*261 | 6 | IS2062 | 543 | 261 | 12 | 7850 | 13.35 | 80.10 |
| pl4 | GUSSET PLATE | PL12*254 | 2 | IS2062 | 522 | 254 | 12 | 7850 | 12.49 | 24.98 |
| pl5 | GUSSET PLATE | PL12*287 | 2 | IS2062 | 555 | 287 | 12 | 7850 | 15.00 | 30.01 |
| pl6 | GUSSET PLATE | PL12*634 | 4 | IS2062 | 668 | 634 | 12 | 7850 | 39.89 | 159.58 |
| pl7 | GUSSET PLATE | PL12*501 | 2 | IS2062 | 715 | 501 | 12 | 7850 | 33.74 | 67.49 |
| pl8 | GUSSET PLATE | PL12*501 | 4 | IS2062 | 734 | 501 | 12 | 7850 | 34.64 | 138.56 |
| pl9 | GUSSET PLATE | PL12*438 | 4 | IS2062 | 501 | 438 | 12 | 7850 | 20.67 | 82.68 |
| pl10 | GUSSET PLATE | PL12*521 | 8 | IS2062 | 715 | 521 | 12 | 7850 | 35.09 | 280.73 |
| pl11 | GUSSET PLATE | PL12*521 | 2 | IS2062 | 715 | 521 | 12 | 7850 | 35.09 | 70.18 |
| pl12 | GUSSET PLATE | PL12*150 | 4 | IS2062 | 324 | 150 | 12 | 7850 | 4.58 | 18.31 |
| pl13 | GUSSET PLATE | PL12*152 | 4 | IS2062 | 319 | 152 | 12 | 7850 | 4.57 | 18.27 |
| pl14 | GUSSET PLATE | PLT16*563 | 4 | IS2062 | 826 | 563 | 16 | 7850 | 58.41 | 233.64 |
| pl15 | GUSSET PLATE | PLT16*743 | 4 | IS2062 | 885 | 743 | 16 | 7850 | 82.59 | 330.36 |
| pl16 | GUSSET PLATE | PLT16*743 | 4 | IS2062 | 885 | 743 | 16 | 7850 | 82.59 | 330.36 |
| pl17 | GUSSET PLATE | PLT16*563 | 2 | IS2062 | 826 | 563 | 16 | 7850 | 58.41 | 116.82 |
| pl18 | GUSSET PLATE | PLT16*563 | 2 | IS2062 | 826 | 563 | 16 | 7850 | 58.41 | 116.82 |
| pl19 | GUSSET PLATE | PLT16*400 | 8 | IS2062 | 523 | 400 | 16 | 7850 | 26.28 | 210.20 |
| pl20 | GUSSET PLATE | PLT16*662 | 4 | IS2062 | 983 | 662 | 16 | 7850 | 81.73 | 326.93 |
| pl21 | GUSSET PLATE | PLT16*662 | 4 | IS2062 | 983 | 662 | 16 | 7850 | 81.73 | 326.93 |
| pl22 | GUSSET PLATE | PLT16*563 | 8 | IS2062 | 826 | 563 | 16 | 7850 | 58.41 | 467.27 |
| pl23 | GUSSET PLATE | PLT16*563 | 16 | IS2062 | 826 | 563 | 16 | 7850 | 58.41 | 934.54 |
| pl24 | CHQ PLATE | PLT6*1220 | 2 | IS2062 | 25182 | 1220 | | 57 | 1,751.16 | 3,502.31 |
| | **TOTAL** | | **1340** | | | | | | | **34,170.45** |

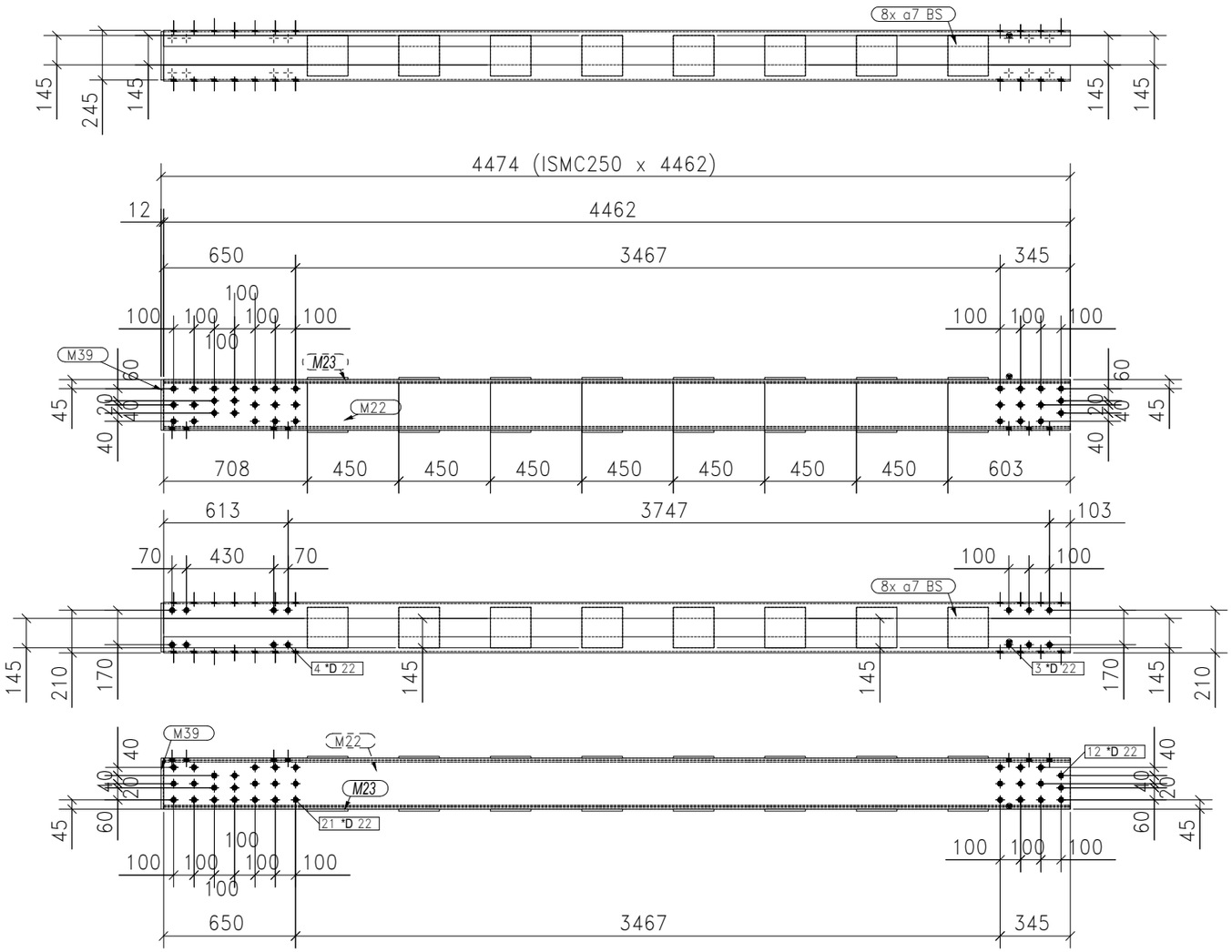


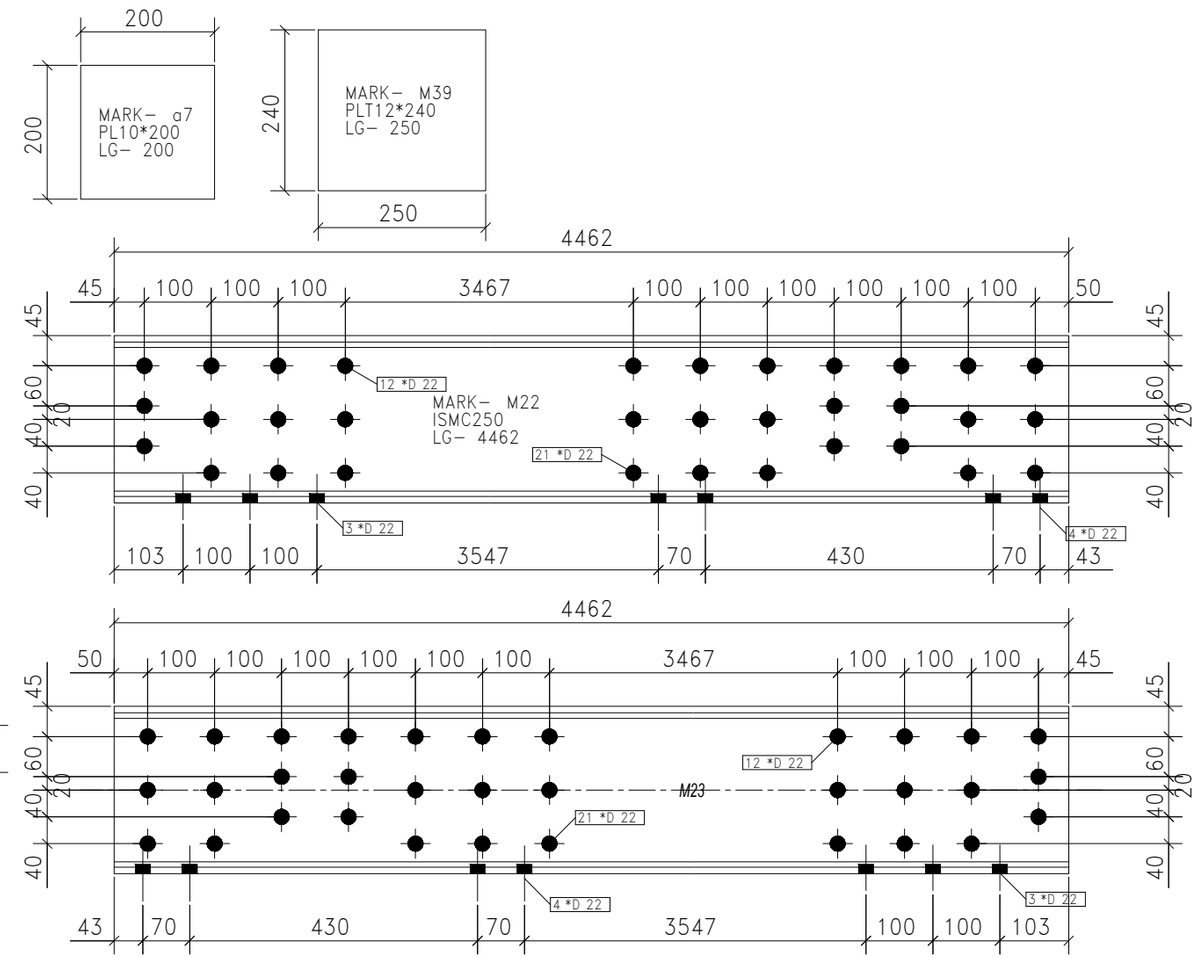


## 4-BOTTOM CHORDS MARKED AS BC-1

**BILL OF MATERIALS** ASSEMBLY MK'D : BC-1 ASSY QTY : 4

| Item Mark | Qty./ Assembly | Profile Size | | Length | | Total Qty. | | Material |
|---|---|---|---|---|---|---|---|---|
| M23 | 1 | ISMC250 | | 4462.00 | | 4 | | IS2062 |
| M22 | 1 | ISMC250 | | 4462.00 | | 4 | | IS2062 |
| M39 | 1 | PLT12*240 | | 250.00 | | 4 | | IS2062 |
| a7 | 16 | PL10*200 | | 200.00 | | 64 | | IS2062 |

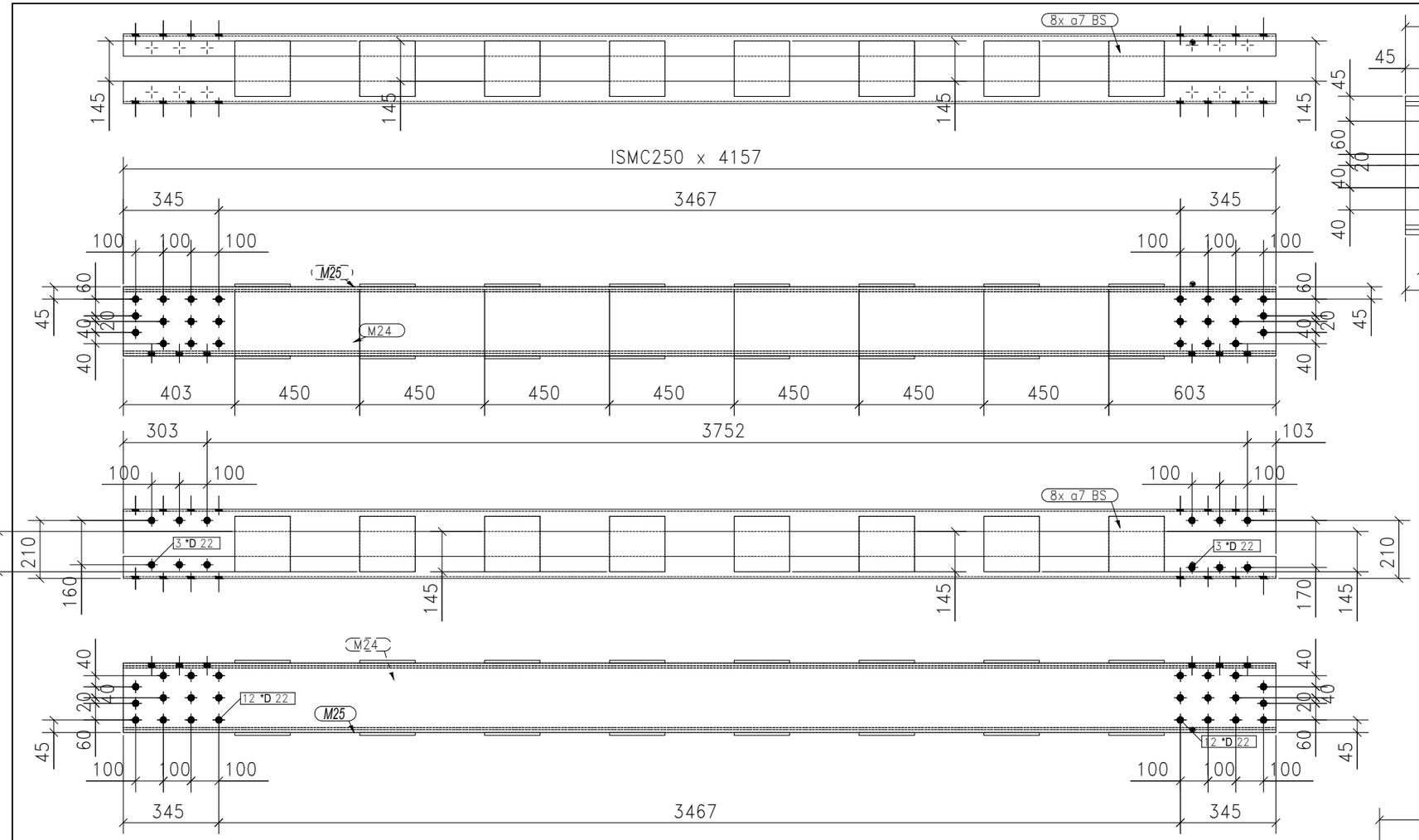


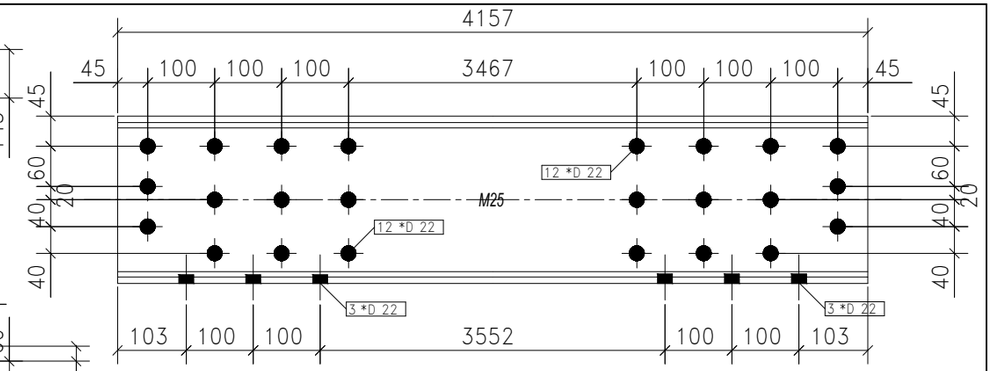


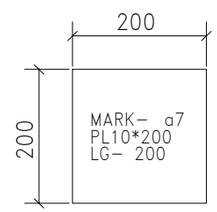


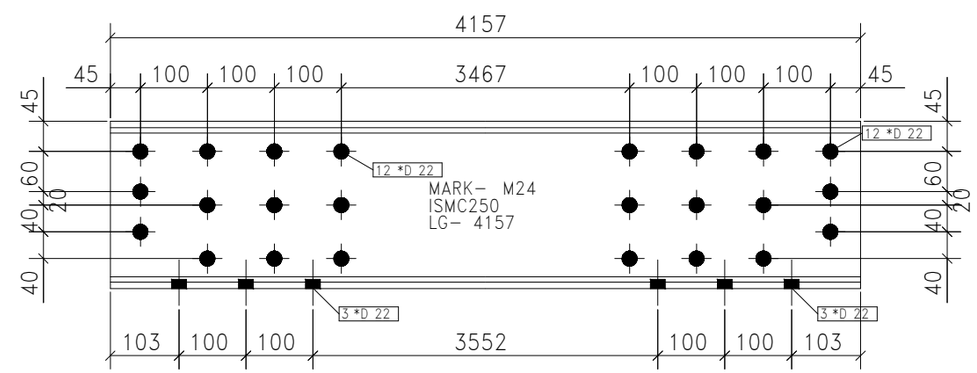


## 4-BOTTOM CHORDS MARKED AS BC-2

**BILL OF MATERIALS** ASSEMBLY MK'D : BC-2 ASSY QTY : 4

| Item Mark | Qty./ Assembly | Profile Size | | Length | | Total Qty. | | Material |
|---|---|---|---|---|---|---|---|---|
| M25 | 1 | ISMC250 | | 4157.00 | | 4 | | IS2062 |
| M24 | 1 | ISMC250 | | 4157.00 | | 4 | | IS2062 |
| a7 | 16 | PL10*200 | | 200.00 | | 64 | | IS2062 |
| | | | | | | | | |

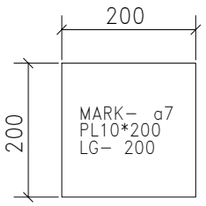


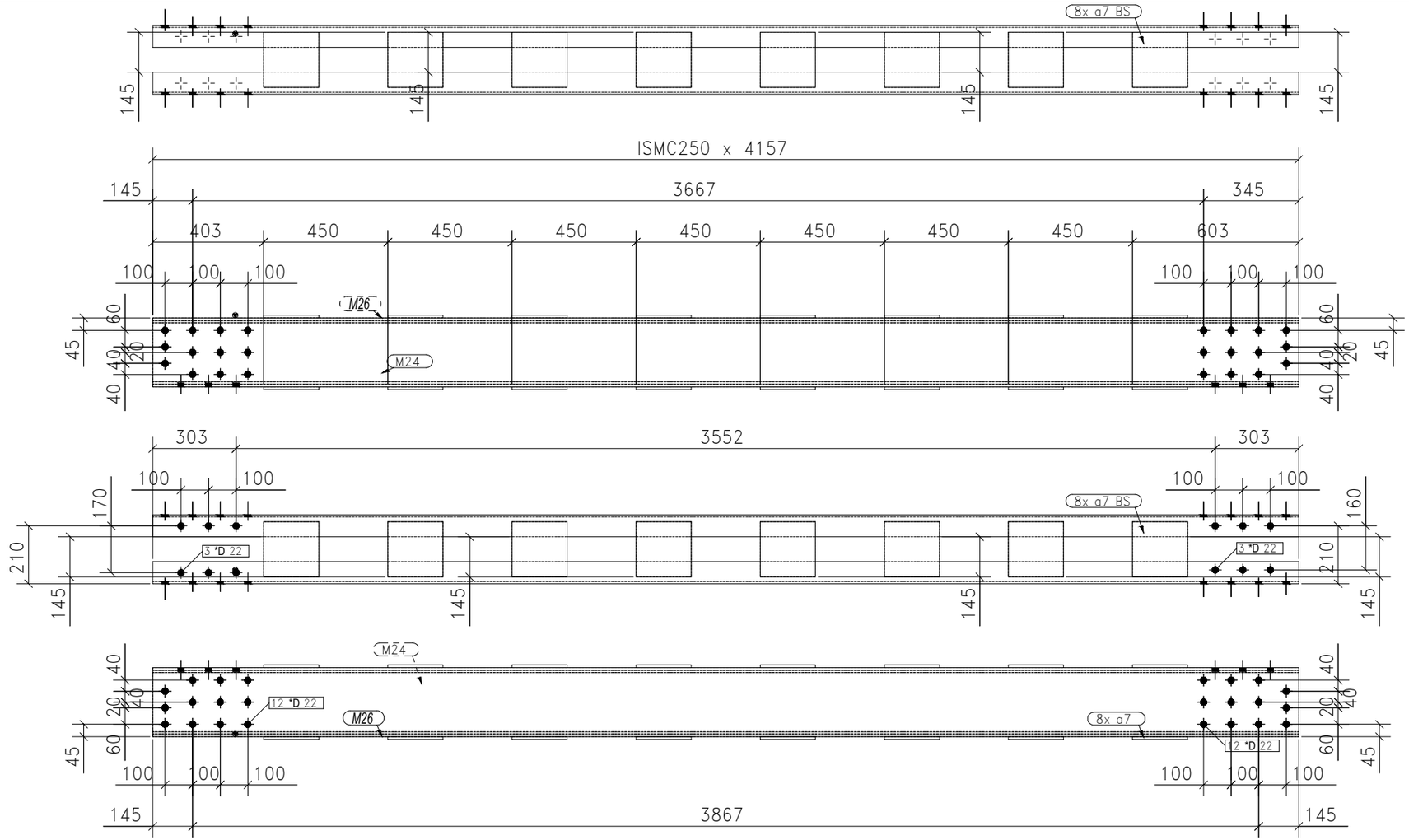


4-BOTTOM CHORDS MARKED AS BC-3

**BILL OF MATERIALS** ASSEMBLY MK'D : BC-3 ASSY QTY : 4

| Item Mark | Qty./ Assembly | Profile Size | | Length | | Total Qty. | | Material |
|---|---|---|---|---|---|---|---|---|
| M26 | 1 | ISMC250 | | 4157.00 | | 4 | | IS2062 |
| M24 | 1 | ISMC250 | | 4157.00 | | 4 | | IS2062 |
| a7 | 16 | PL10*200 | | 200.00 | | 64 | | IS2062 |
| | | | | | | | | |

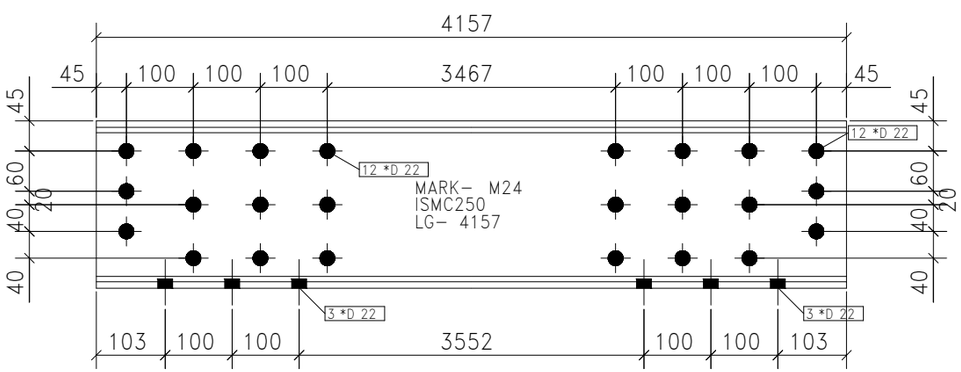


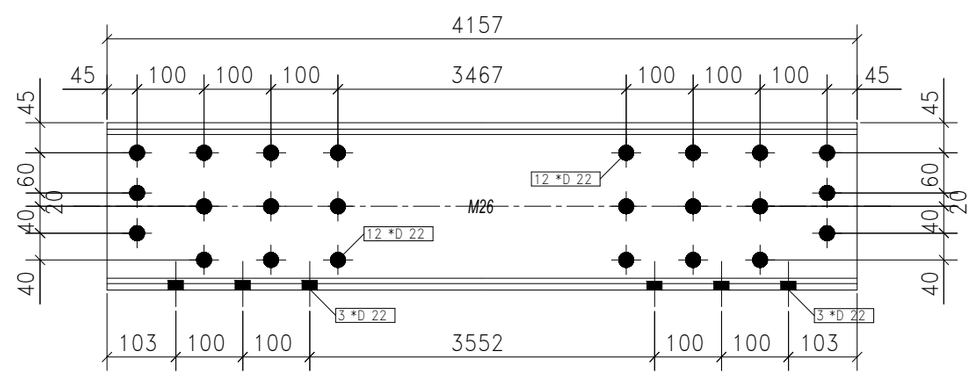

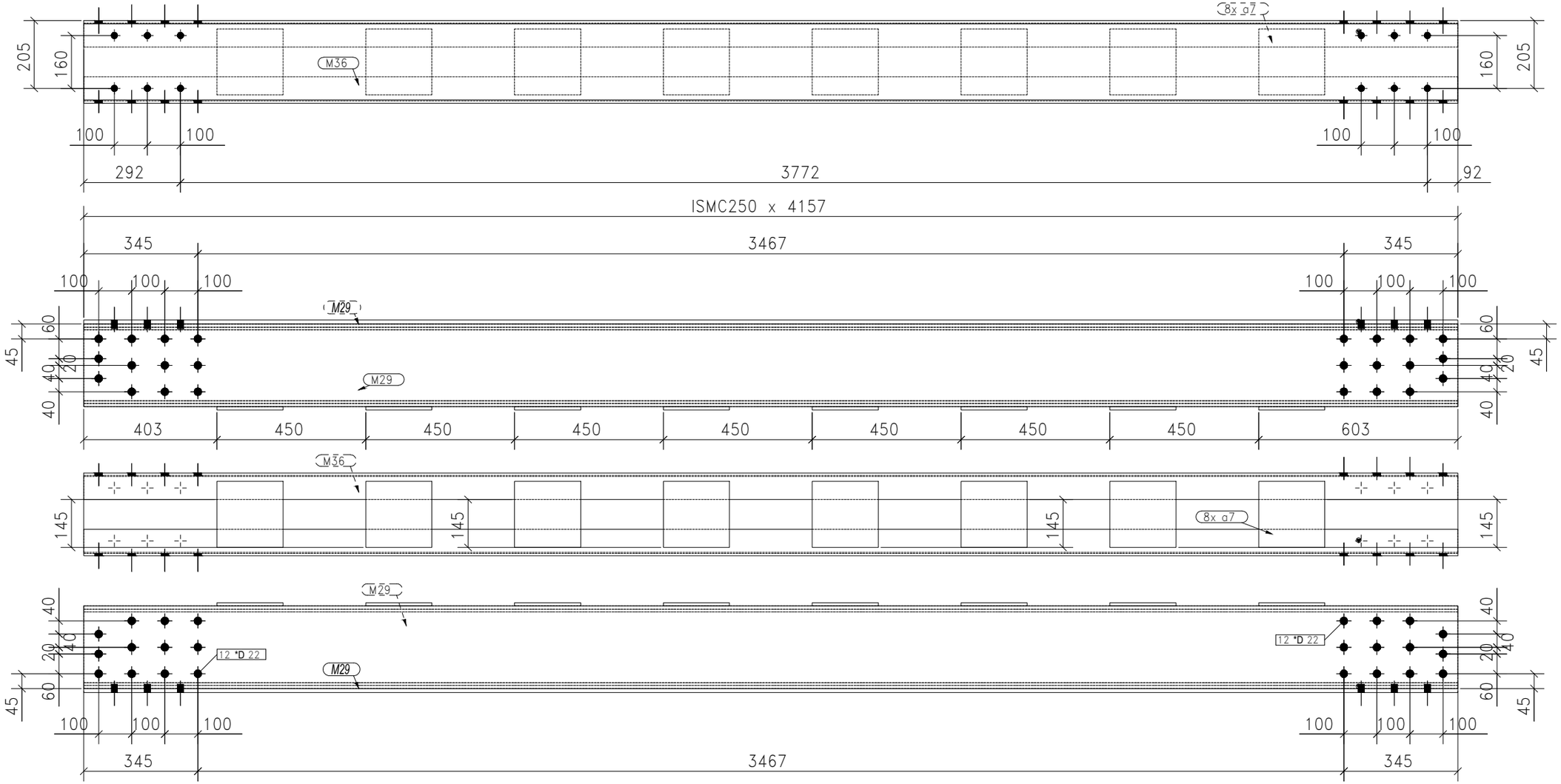


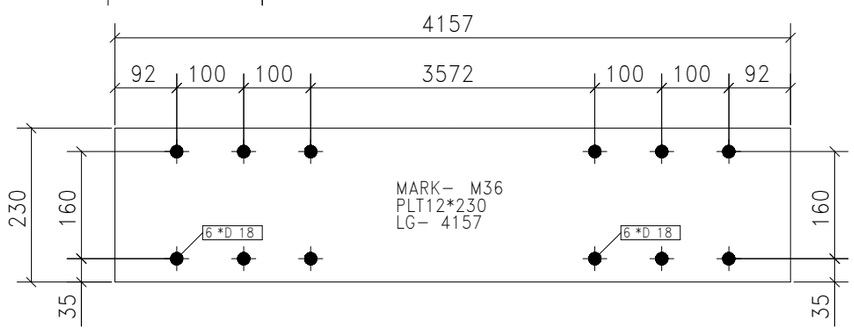


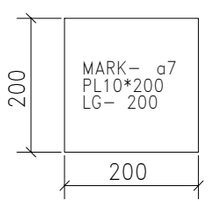


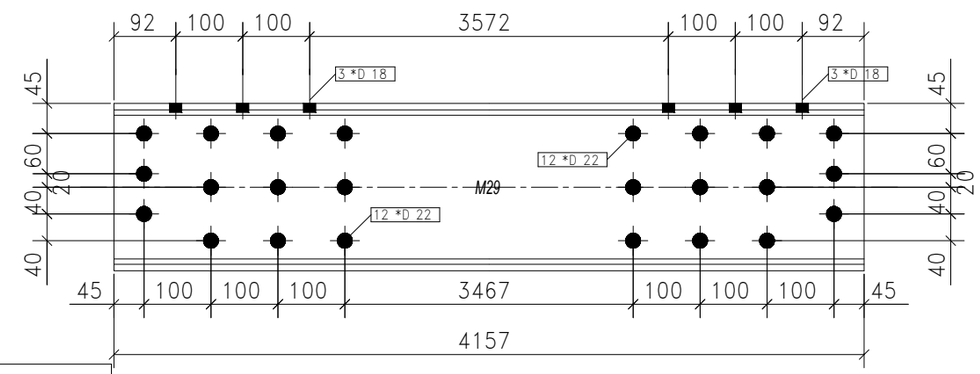


4-TOP CHORDS MARKED AS TC-1

**BILL OF MATERIALS** ASSEMBLY MK'D : TC-1 ASSY QTY : 4

| Item Mark | Qty./ Assembly | Profile Size | | Length | | Total Qty. | | Material |
|---|---|---|---|---|---|---|---|---|
| M29 | 1 | ISMC250 | | 4157.00 | | 4 | | IS2062 |
| M29 | 1 | ISMC250 | | 4157.00 | | 4 | | IS2062 |
| M36 | 1 | PLT12*230 | | 4157.00 | | 4 | | IS2062 |
| a7 | 8 | PL10*200 | | 200.00 | | 32 | | IS2062 |
| | | | | | | Total | | |

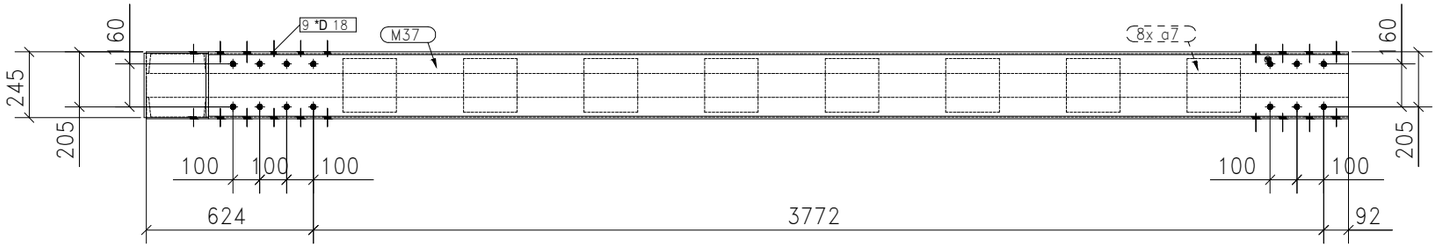


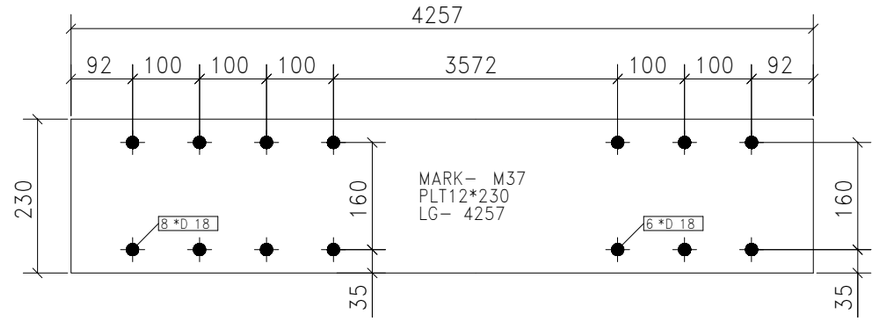


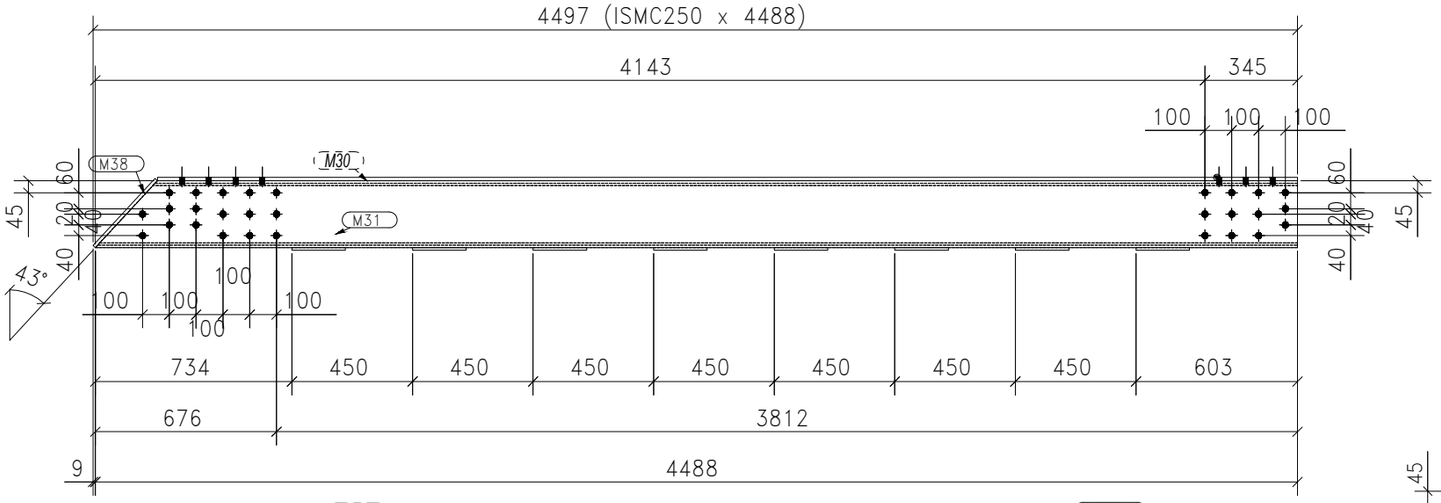


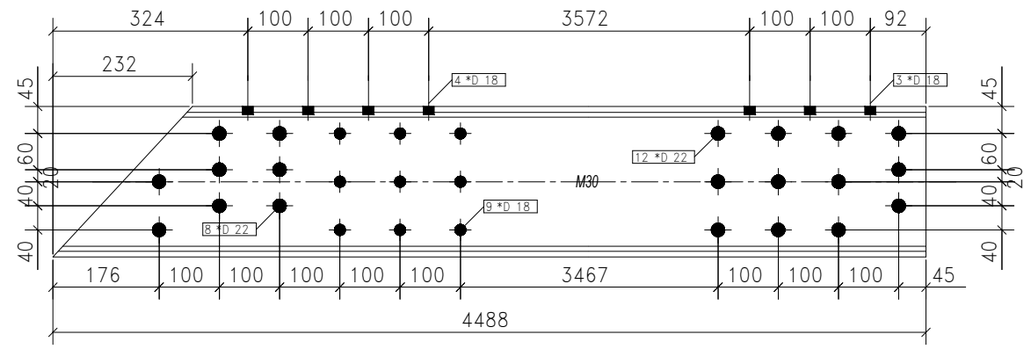


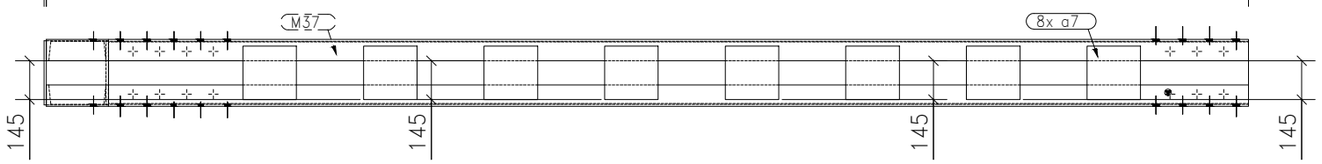


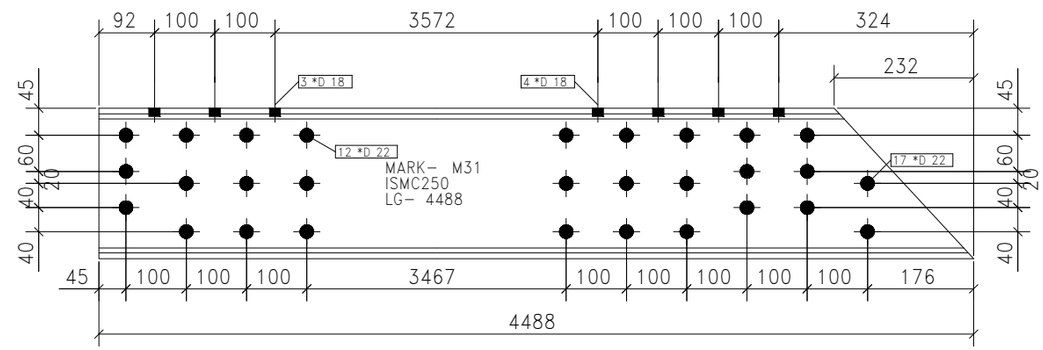


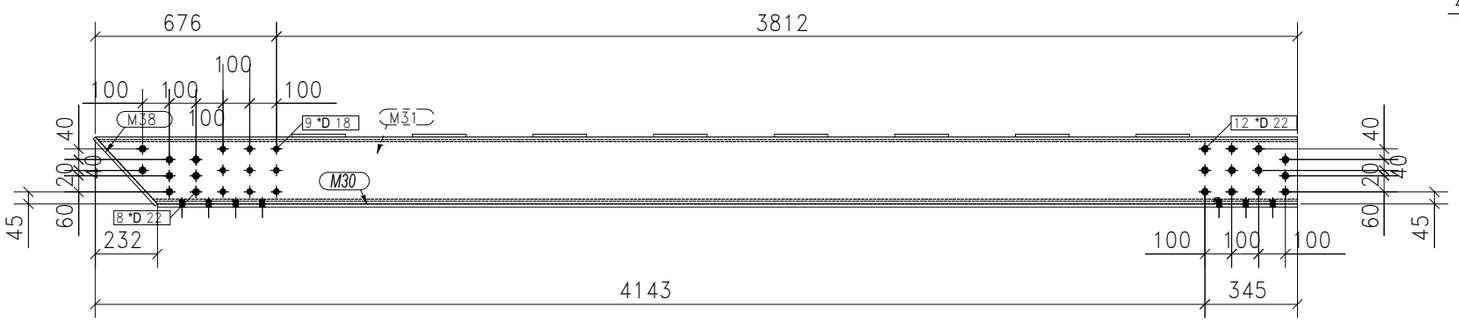


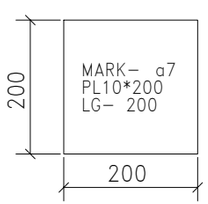


## 2-TOP CHORDS MARKED AS TC-2

**BILL OF MATERIALS** ASSEMBLY MK'D : TC-2 ASSY QTY : 2

| Item Mark | Qty./ Assembly | Profile Size | | Length | | Total Qty. | | Material |
|---|---|---|---|---|---|---|---|---|
| M30 | 1 | ISMC250 | | 4488.26 | | 2 | | IS2062 |
| M31 | 1 | ISMC250 | | 4488.26 | | 2 | | IS2062 |
| M37 | 1 | PLT12*230 | | 4256.76 | | 2 | | IS2062 |
| M38 | 1 | PLT12*240 | | 340.72 | | 2 | | IS2062 |
| a7 | 8 | PL10*200 | | 200.00 | | 16 | | IS2062 |

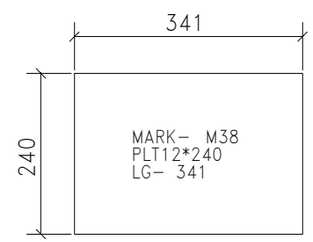

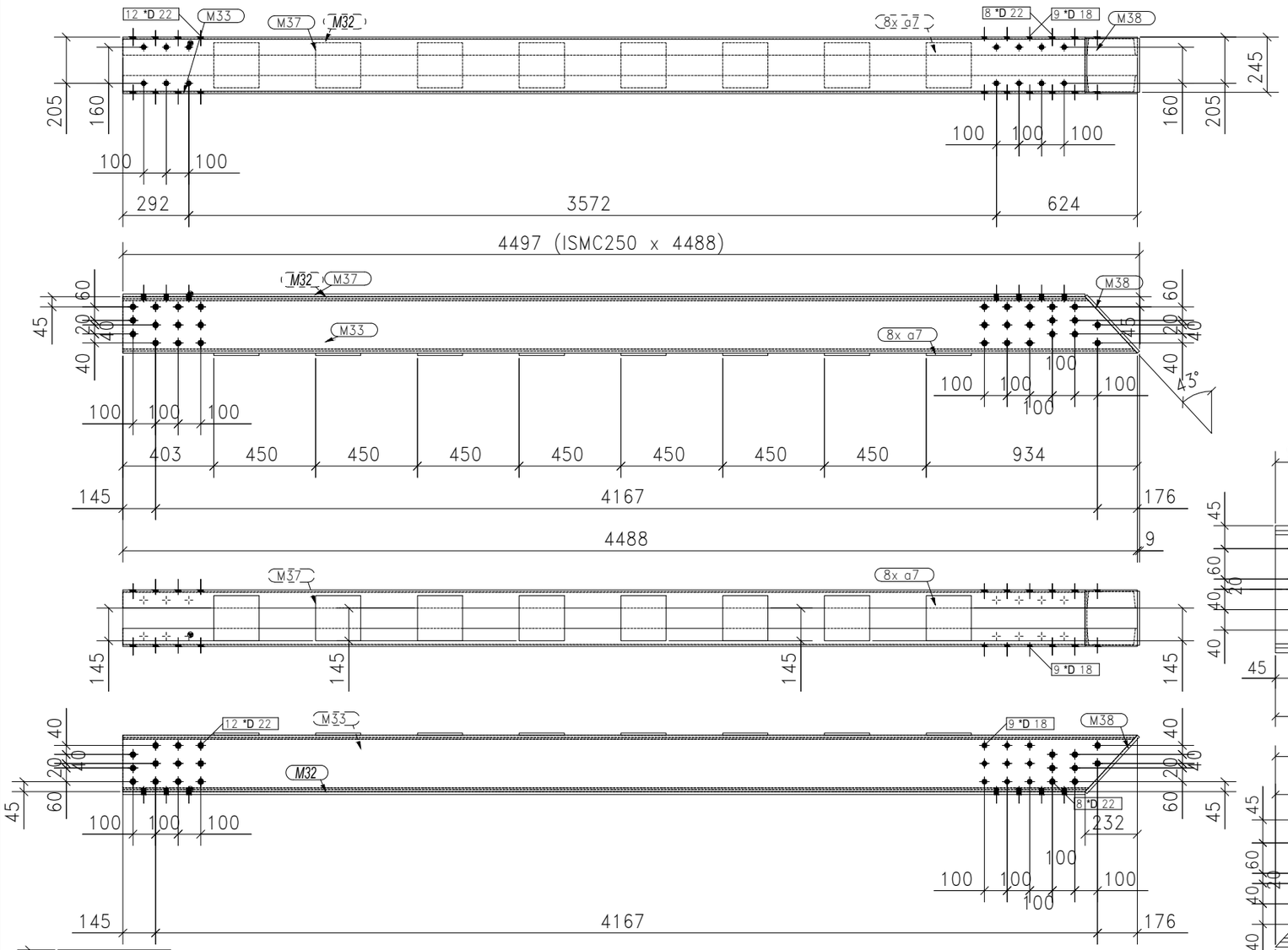


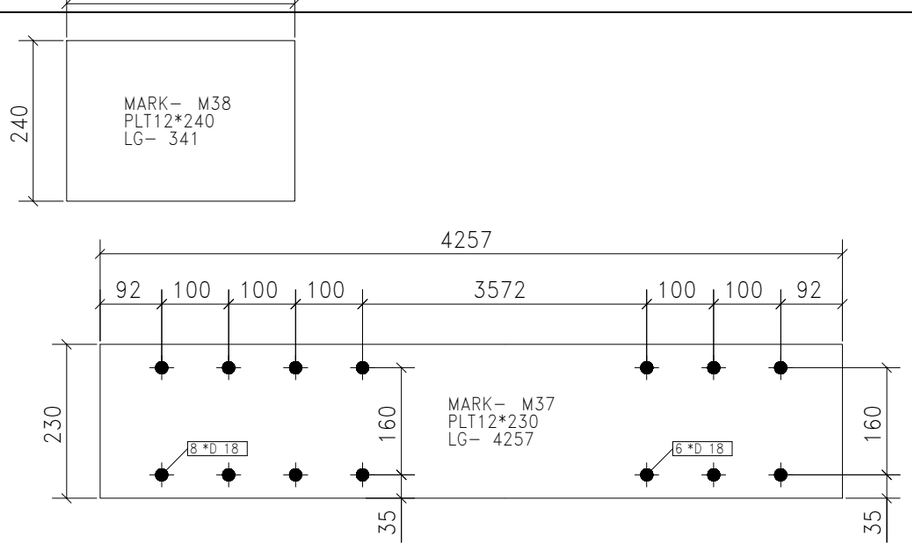


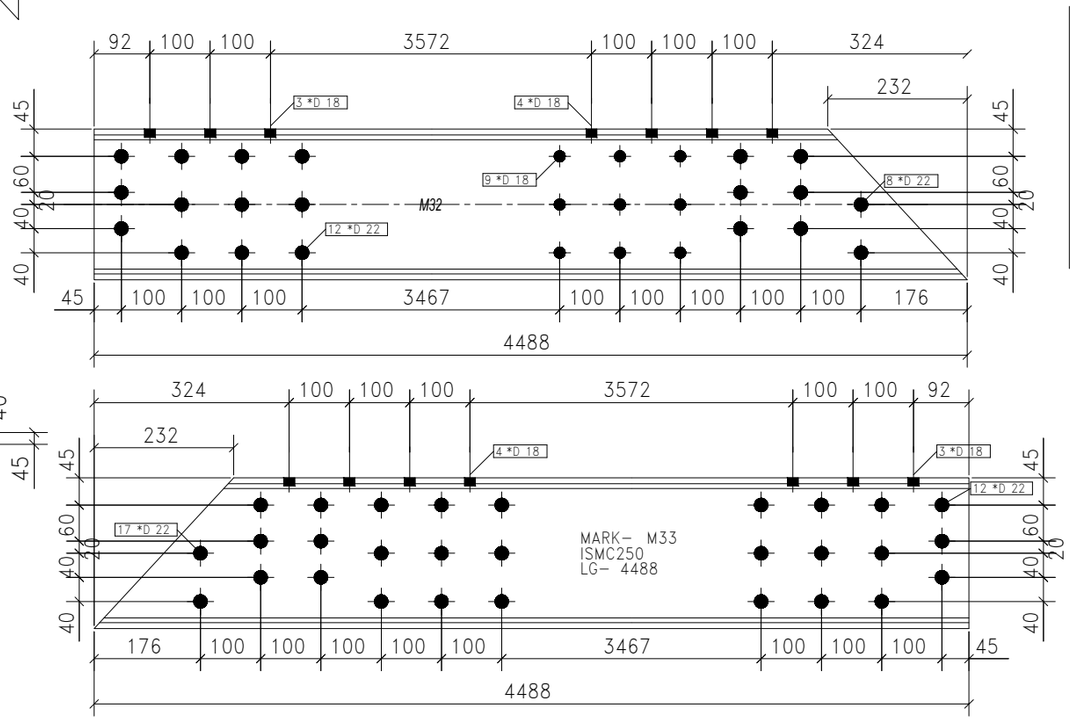


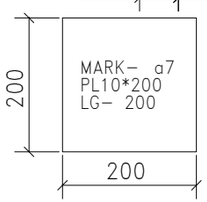


2-TOP CHORDS MARKED AS TC-3

**BILL OF MATERIALS** ASSEMBLY MK'D : TC-3 ASSY QTY : 2

| Item Mark | Qty./ Assembly | Profile Size | | Length | | Total Qty. | | Material |
|---|---|---|---|---|---|---|---|---|
| M32 | 1 | ISMC250 | | 4488.26 | | 2 | | IS2062 |
| M33 | 1 | ISMC250 | | 4488.26 | | 2 | | IS2062 |
| M37 | 1 | PLT12*230 | | 4256.76 | | 2 | | IS2062 |
| M38 | 1 | PLT12*240 | | 340.72 | | 2 | | IS2062 |
| a7 | 8 | PL10*200 | | 200.00 | | 16 | | IS2062 |
| | | | | | | | | |

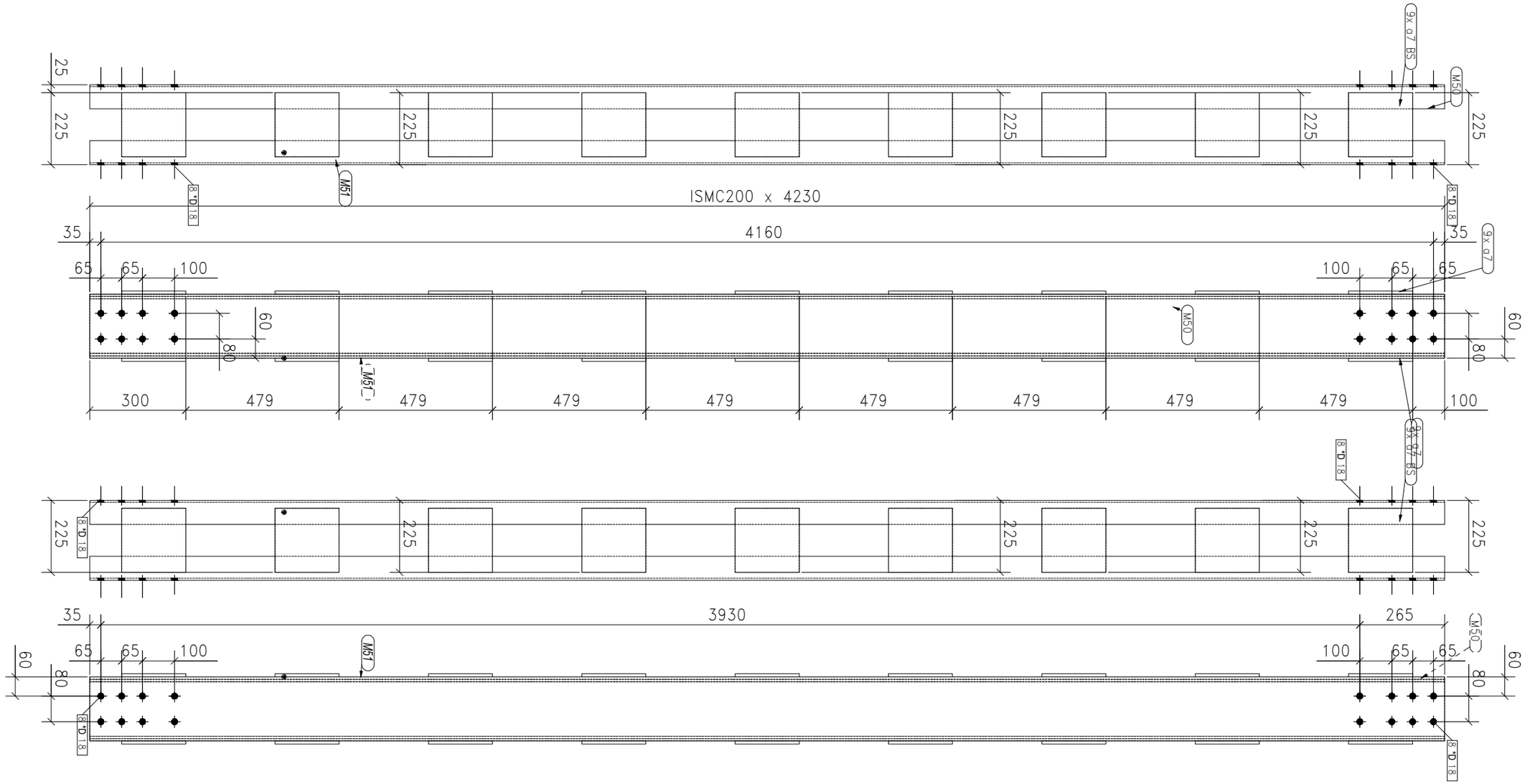


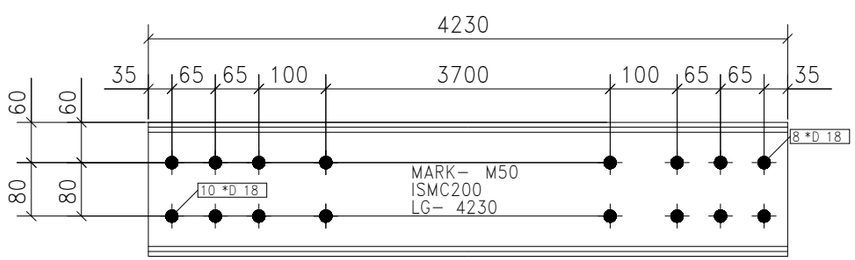


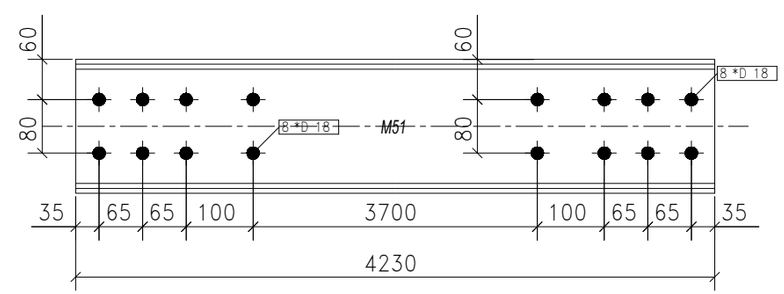


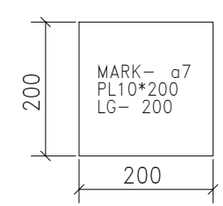


## 4-VERTICAL BRACES MARKED AS V-1

**BILL OF MATERIALS** ASSEMBLY MK'D : V-1 ASSY QTY : 4

| Item Mark | Qty./ Assembly | Profile Size | | Length | | Total Qty. | | Material |
|---|---|---|---|---|---|---|---|---|
| M51 | 1 | ISMC200 | | 4230.00 | | 4 | | IS2062 |
| M50 | 1 | ISMC200 | | 4230.00 | | 4 | | IS2062 |
| a7 | 18 | PL10*200 | | 200.00 | | 72 | | IS2062 |

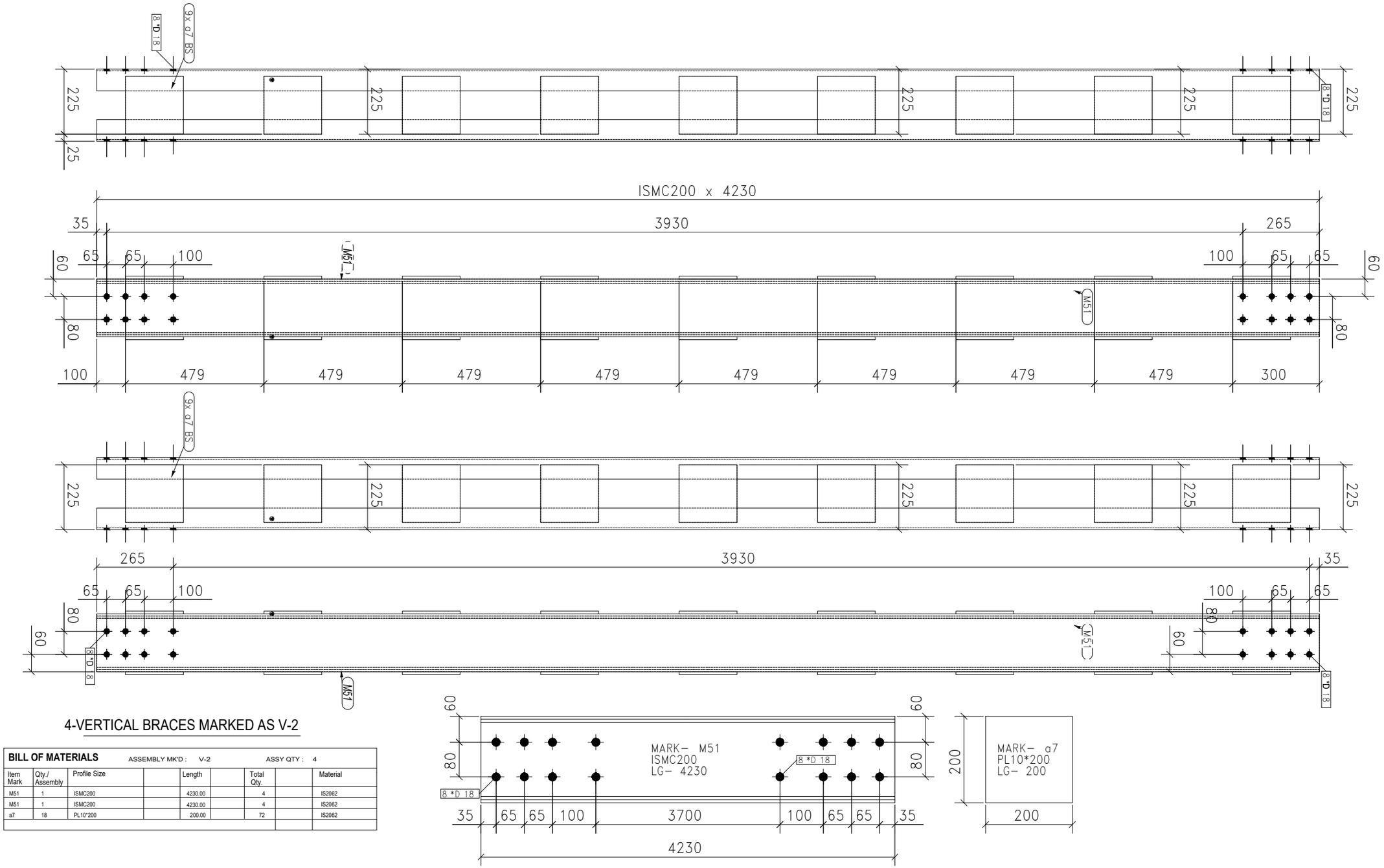


4-VERTICAL BRACES MARKED AS V-2

**BILL OF MATERIALS** ASSEMBLY MK'D : V-2 ASSY QTY : 4

| Item Mark | Qty./ Assembly | Profile Size | | Length | | Total Qty. | | Material |
|---|---|---|---|---|---|---|---|---|
| M51 | 1 | ISMC200 | | 4230.00 | | 4 | | IS2062 |
| M51 | 1 | ISMC200 | | 4230.00 | | 4 | | IS2062 |
| a7 | 18 | PL10*200 | | 200.00 | | 72 | | IS2062 |
| | | | | | | | | |

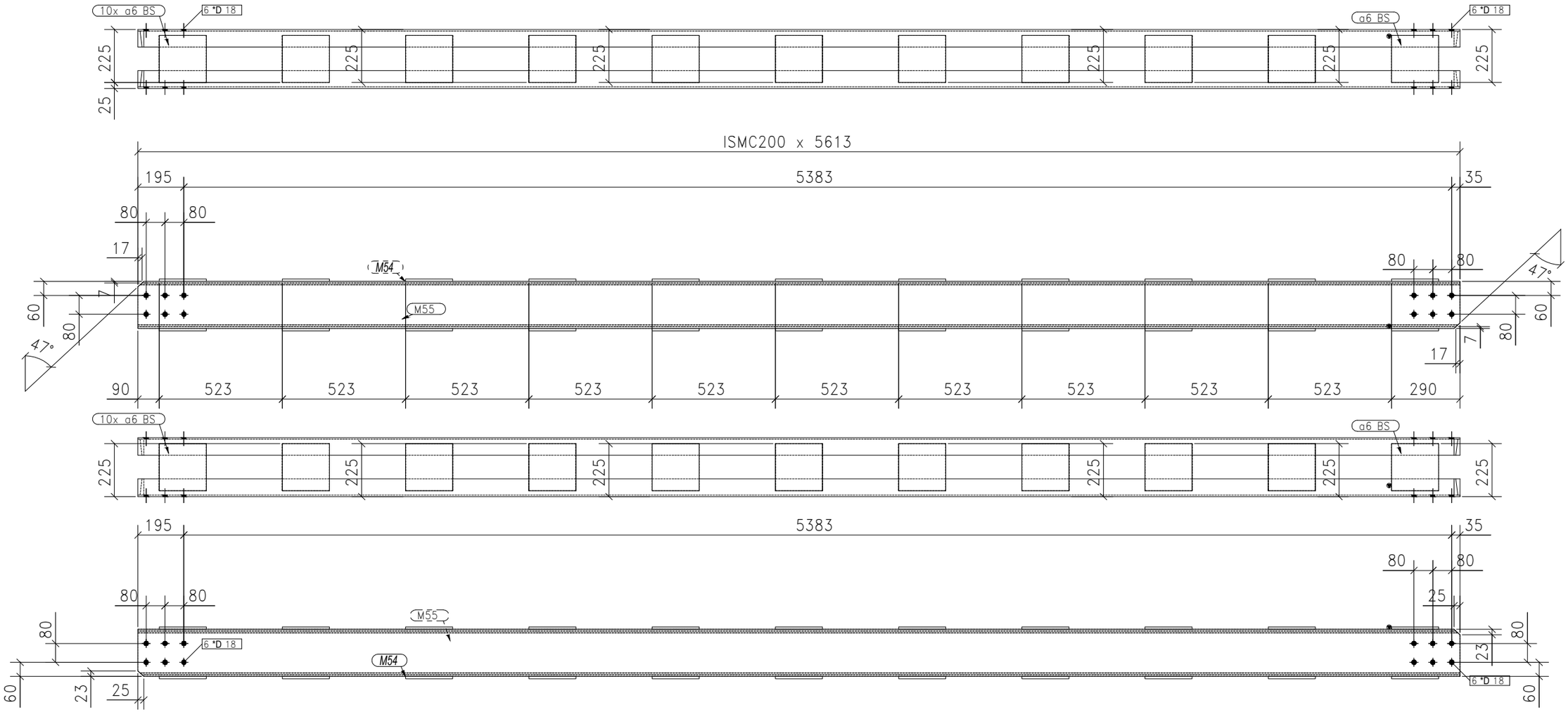


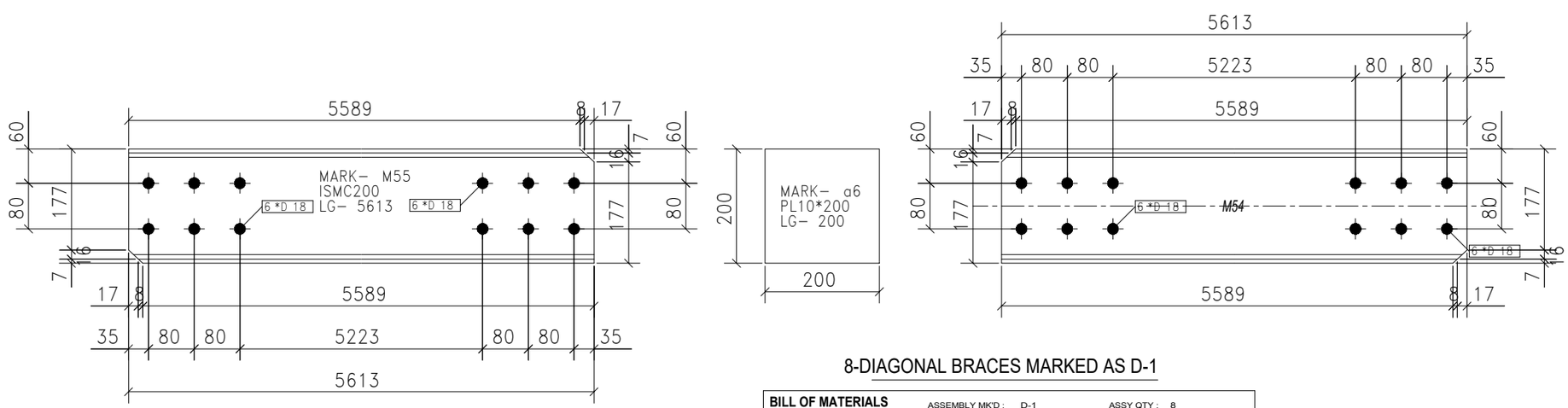


## 8-DIAGONAL BRACES MARKED AS D-1

**BILL OF MATERIALS** ASSEMBLY MK'D : D-1 ASSY QTY : 8

| Item Mark | Qty./ Assembly | Profile Size | | Length | | Total Qty. | | Material |
|---|---|---|---|---|---|---|---|---|
| M54 | 1 | ISMC200 | | 5613.39 | | 8 | | IS2062 |
| M55 | 1 | ISMC200 | | 5613.39 | | 8 | | IS2062 |
| a6 | 22 | PL10*200 | | 200.00 | | 176 | | IS2062 |

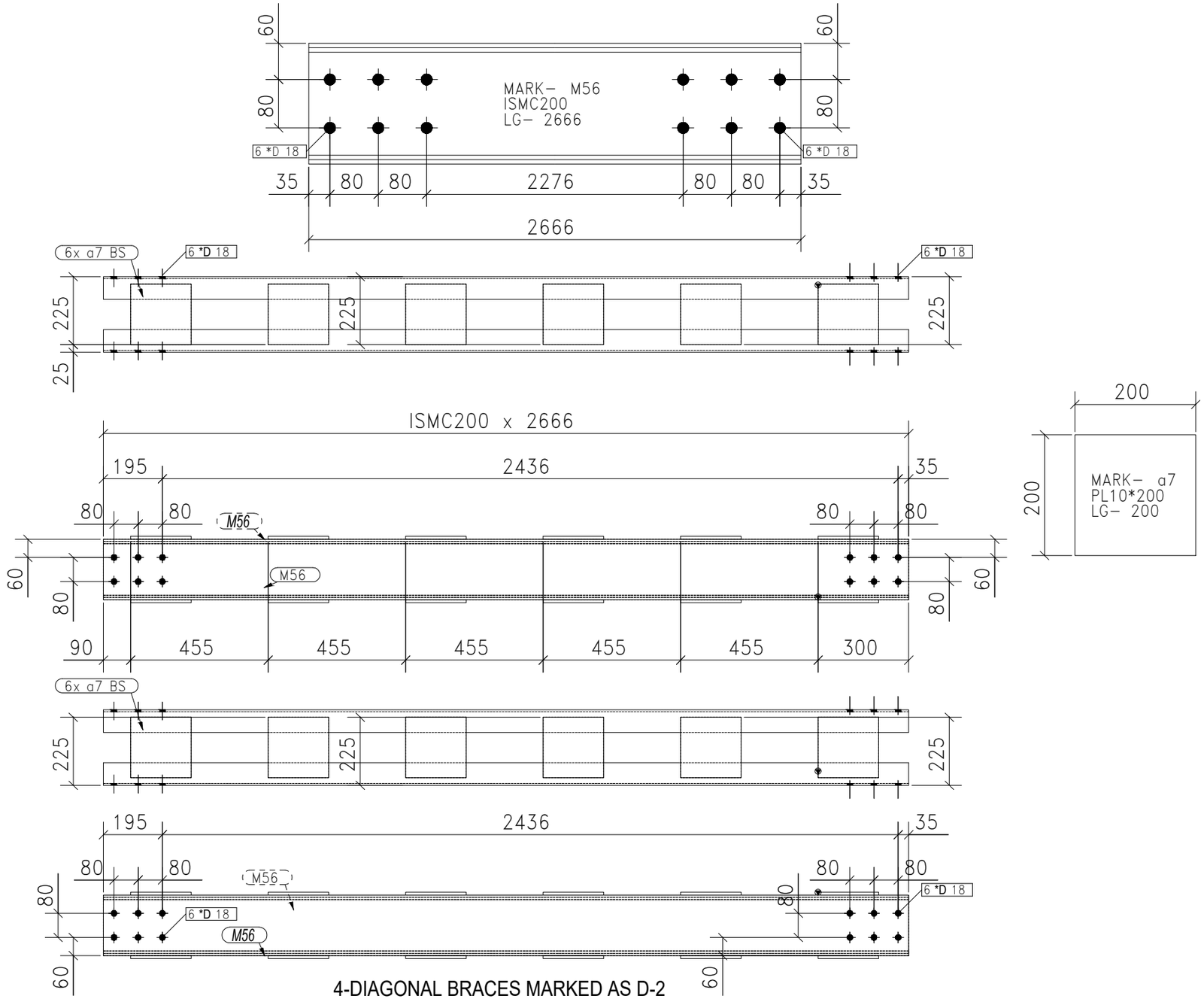


## 4-DIAGONAL BRACES MARKED AS D-2

**BILL OF MATERIALS** ASSEMBLY MK'D : D-2 ASSY QTY : 4

| Item Mark | Qty./ Assembly | Profile Size | | Length | | Total Qty. | | Material |
|---|---|---|---|---|---|---|---|---|
| M56 | 1 | ISMC200 | | 2665.56 | | 4 | | IS2062 |
| M56 | 1 | ISMC200 | | 2665.56 | | 4 | | IS2062 |
| a7 | 12 | PL10*200 | | 200.00 | | 48 | | IS2062 |
| | | | | | | | | |

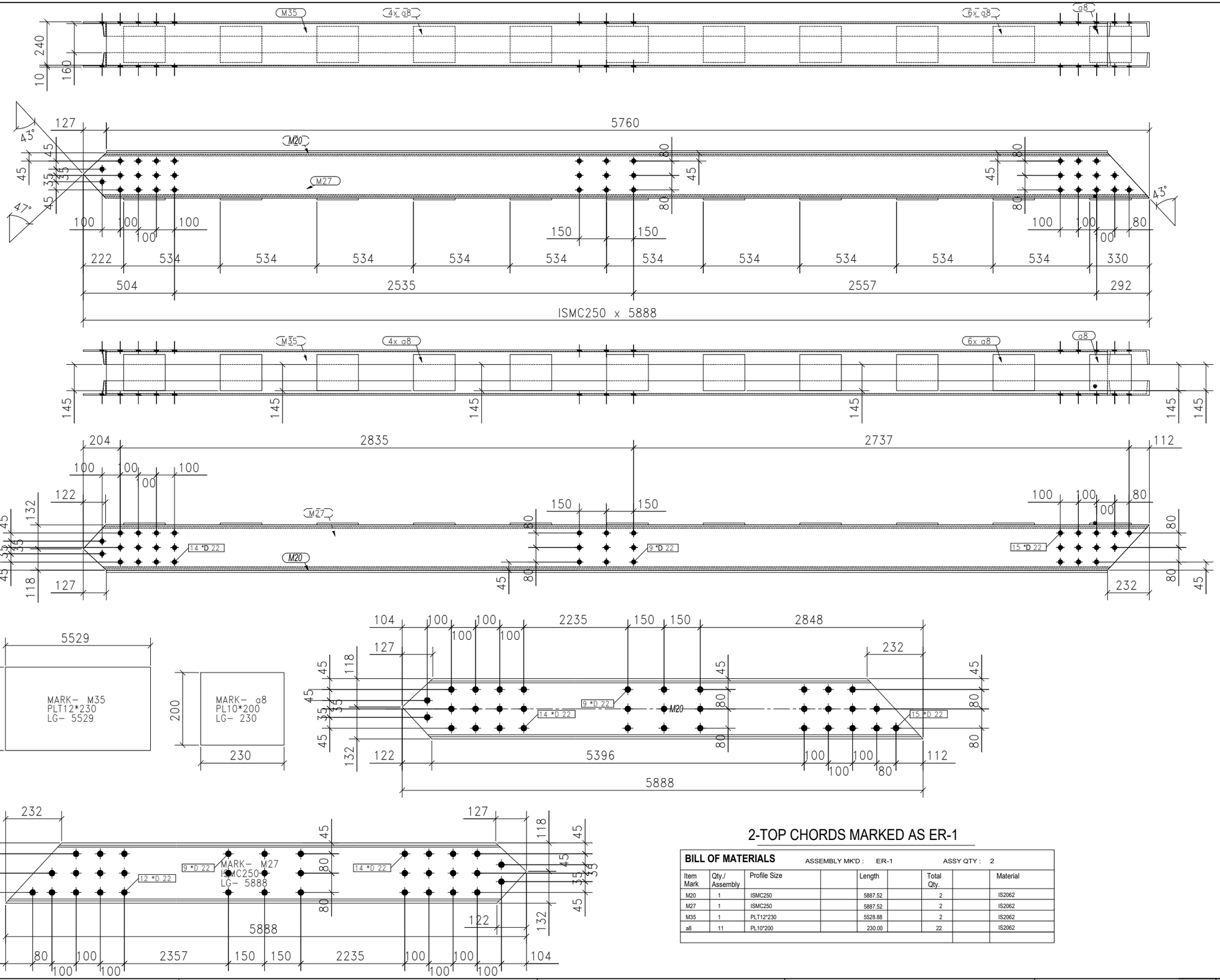


## 2-TOP CHORDS MARKED AS ER-1

**BILL OF MATERIALS** ASSEMBLY MK'D : ER-1 ASSY QTY : 2

| Item Mark | Qty./ Assembly | Profile Size | | Length | | Total Qty. | | Material |
|---|---|---|---|---|---|---|---|---|
| M20 | 1 | ISMC250 | | 5887.52 | | 2 | | IS2062 |
| M27 | 1 | ISMC250 | | 5887.52 | | 2 | | IS2062 |
| M35 | 1 | PLT12*230 | | 5528.88 | | 2 | | IS2062 |
| a8 | 11 | PL10*200 | | 230.00 | | 22 | | IS2062 |
| | | | | | | | | |

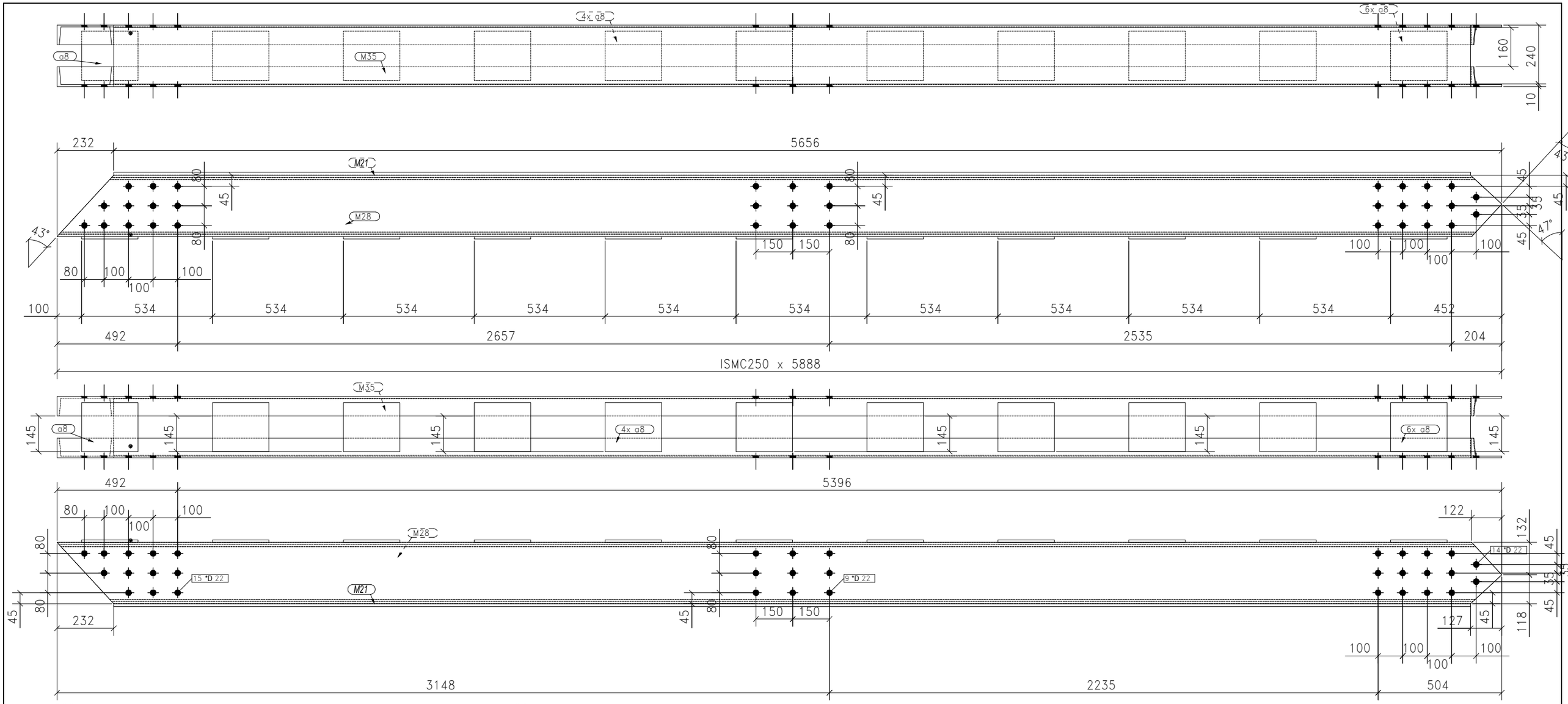


2-TOP CHORDS MARKED AS ER-2

**BILL OF MATERIALS** ASSEMBLY MK'D : ER-2 ASSY QTY : 2

| Item Mark | Qty./ Assembly | Profile Size | | Length | | Total Qty. | | Material |
|---|---|---|---|---|---|---|---|---|
| M21 | 1 | ISMC250 | | 5887.52 | | 2 | | IS2062 |
| M28 | 1 | ISMC250 | | 5887.52 | | 2 | | IS2062 |
| M35 | 1 | PLT12*230 | | 5528.88 | | 2 | | IS2062 |
| a8 | 11 | PL10*200 | | 230.00 | | 22 | | IS2062 |
| | | | | | | | | |

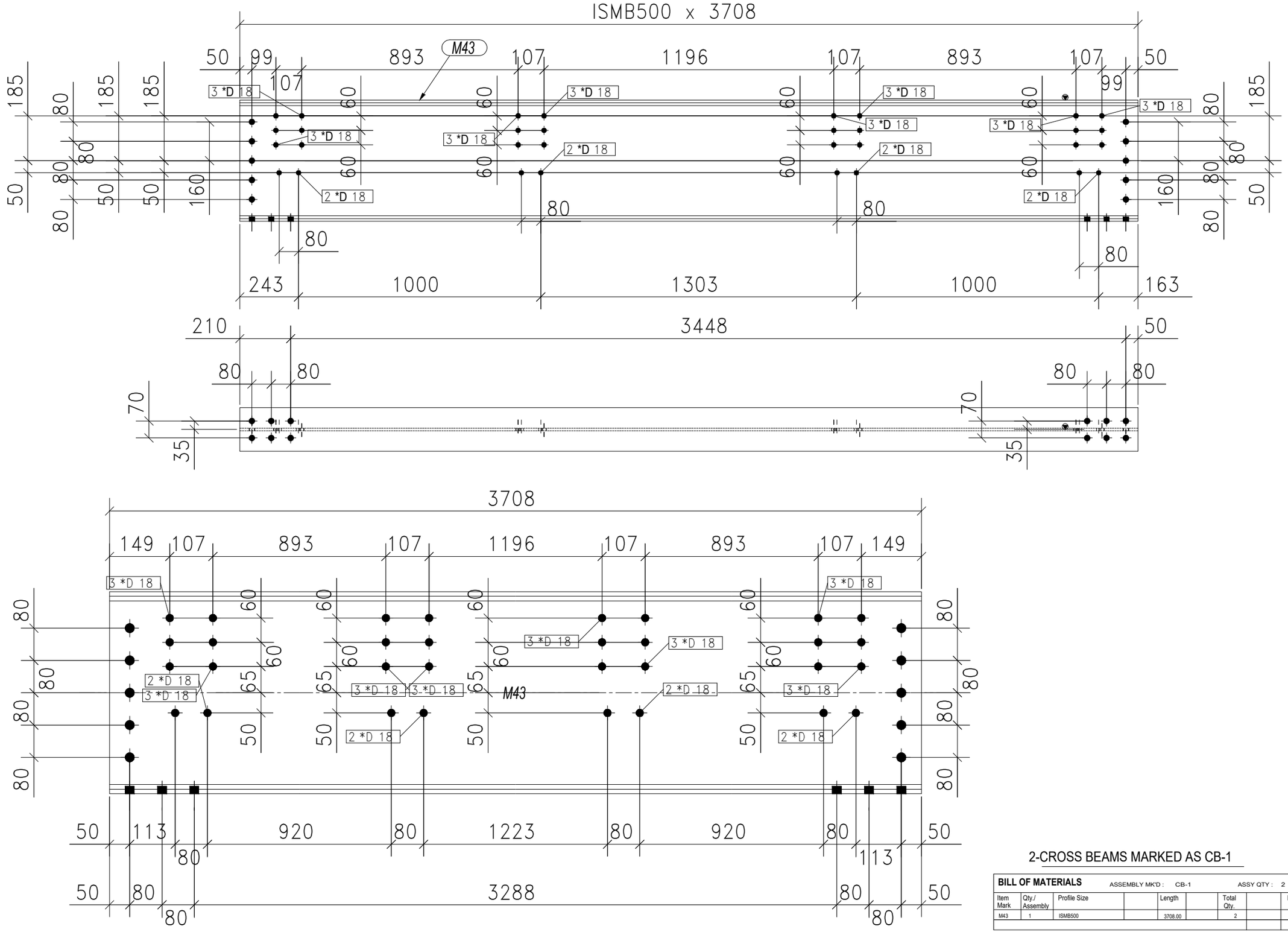


2-CROSS BEAMS MARKED AS CB-1

**BILL OF MATERIALS** ASSEMBLY MK'D : CB-1 ASSY QTY : 2

| Item Mark | Qty./ Assembly | Profile Size | | Length | | Total Qty. | | Material |
|---|---|---|---|---|---|---|---|---|
| M43 | 1 | ISMB500 | | 3708.00 | | 2 | | IS2062 |

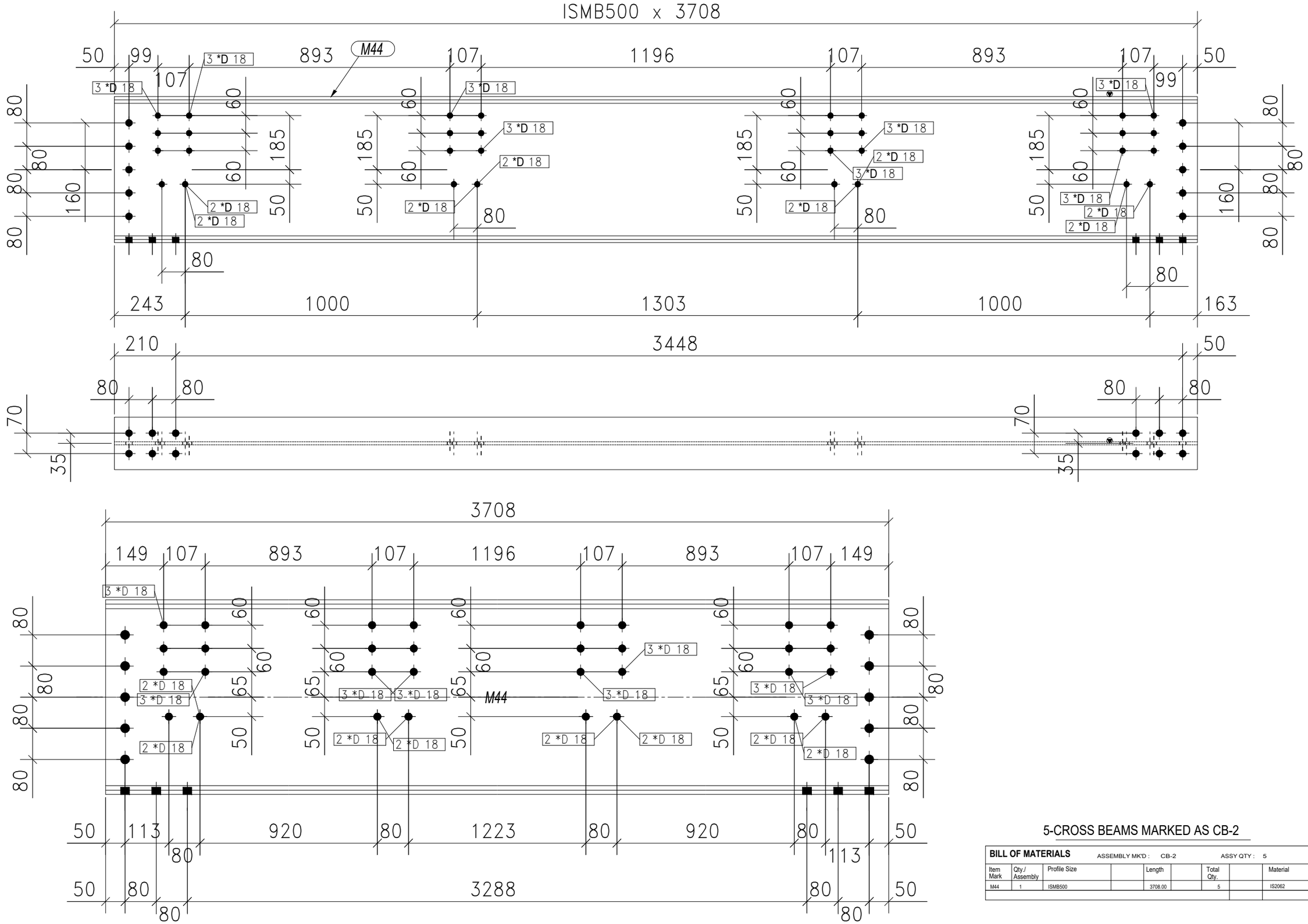


5-CROSS BEAMS MARKED AS CB-2

**BILL OF MATERIALS** ASSEMBLY MK'D : CB-2 ASSY QTY : 5

| Item Mark | Qty./ Assembly | Profile Size | | Length | | Total Qty. | | Material |
|---|---|---|---|---|---|---|---|---|
| M44 | 1 | ISMB500 | | 3708.00 | | 5 | | IS2062 |

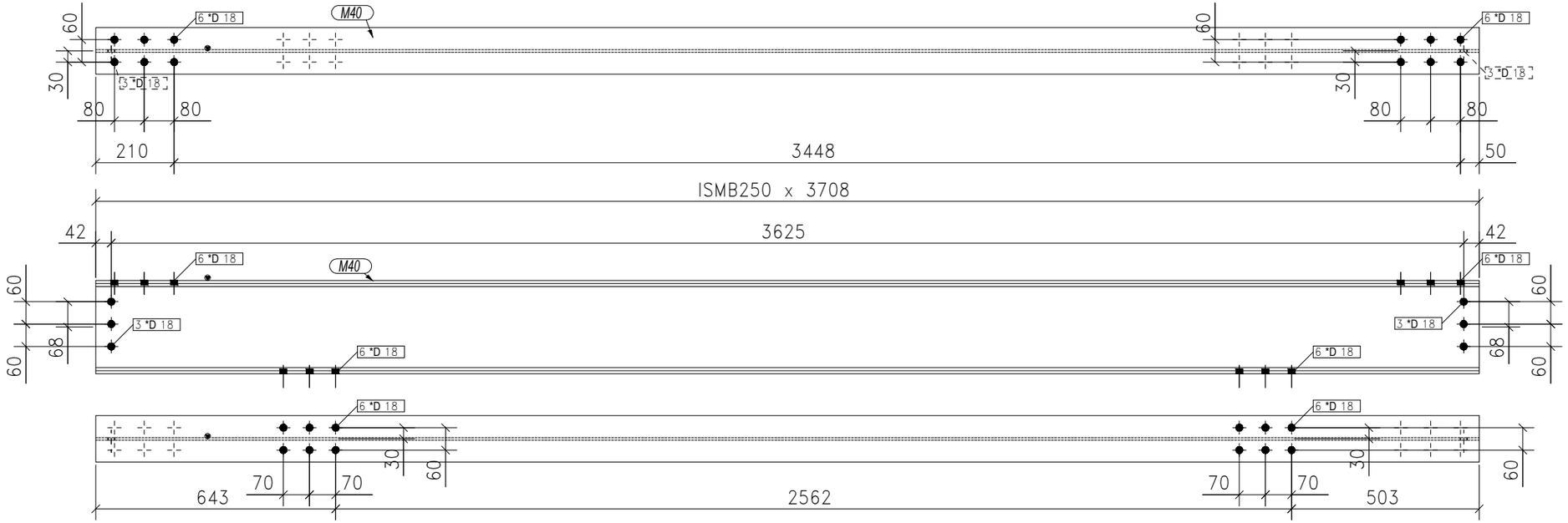


## 2-STRUT BEAMS MARKED AS SB-1

**BILL OF MATERIALS** ASSEMBLY MK'D : SB-1 ASSY QTY : 2

| Item Mark | Qty./ Assembly | Profile Size | | Length | | Total Qty. | | Material |
|---|---|---|---|---|---|---|---|---|
| M40 | 1 | ISMB250 | | 3708.00 | | 2 | | IS2062 |

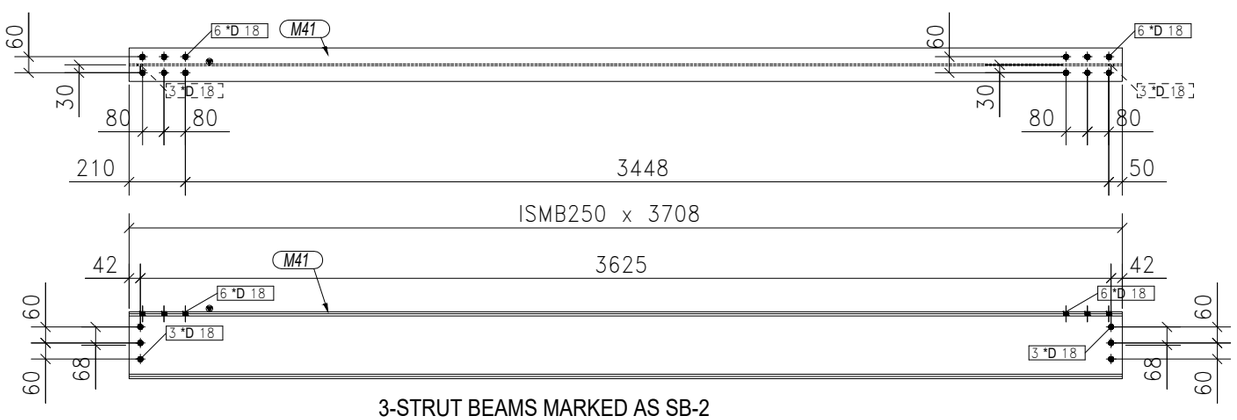


## 3-STRUT BEAMS MARKED AS SB-2

**BILL OF MATERIALS** ASSEMBLY MK'D : SB-2 ASSY QTY : 3

| Item Mark | Qty./ Assembly | Profile Size | | Length | | Total Qty. | Total Wt. | Material |
|---|---|---|---|---|---|---|---|---|
| M41 | 1 | ISMB250 | | 3708.00 | | 3 | | IS2062 |

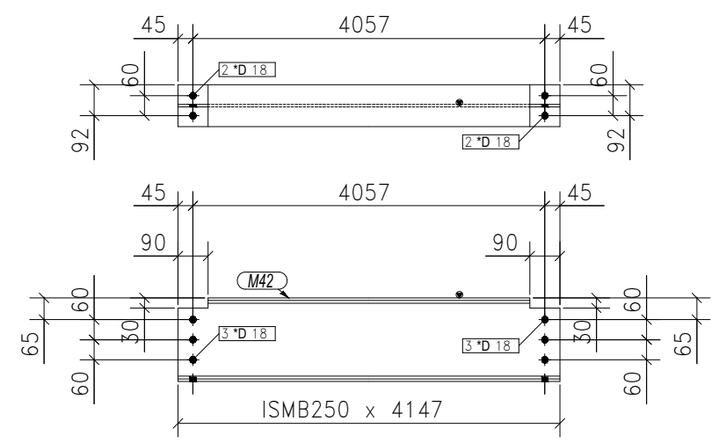


## 24-STRINGER BEAMS MARKED AS ST

**BILL OF MATERIALS** ASSEMBLY MK'D : ST-1 ASSY QTY : 24

| Item Mark | Qty./ Assembly | Profile Size | | Length | | Total Qty. | | Material |
|---|---|---|---|---|---|---|---|---|
| M42 | 1 | ISMB250 | | 4146.80 | | 24 | | IS2062 |

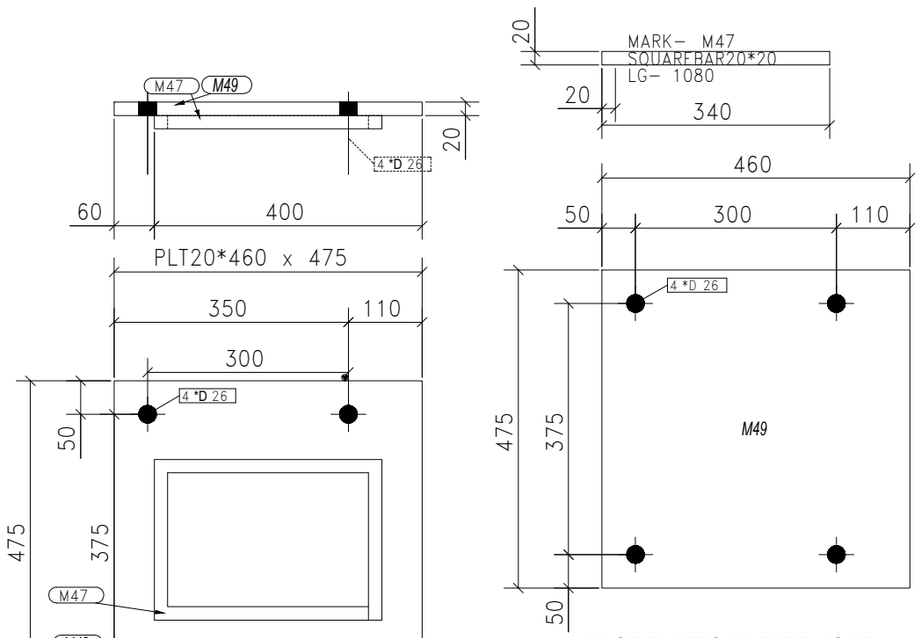


2-BASE PLATES MARKED AS BP-1

**BILL OF MATERIALS** ASSEMBLY MK'D : BP-1 ASSY QTY : 2

| Item Mark | Qty./ Assembly | Profile Size | | Length | | Total Qty. | Total Wt. | Material |
|---|---|---|---|---|---|---|---|---|
| M49 | 1 | PLT20*460 | | 475.00 | | 2 | | IS2062 |
| M47 | 1 | SQUAREBAR20*20 | | 1080.00 | | 2 | | IS2062 |

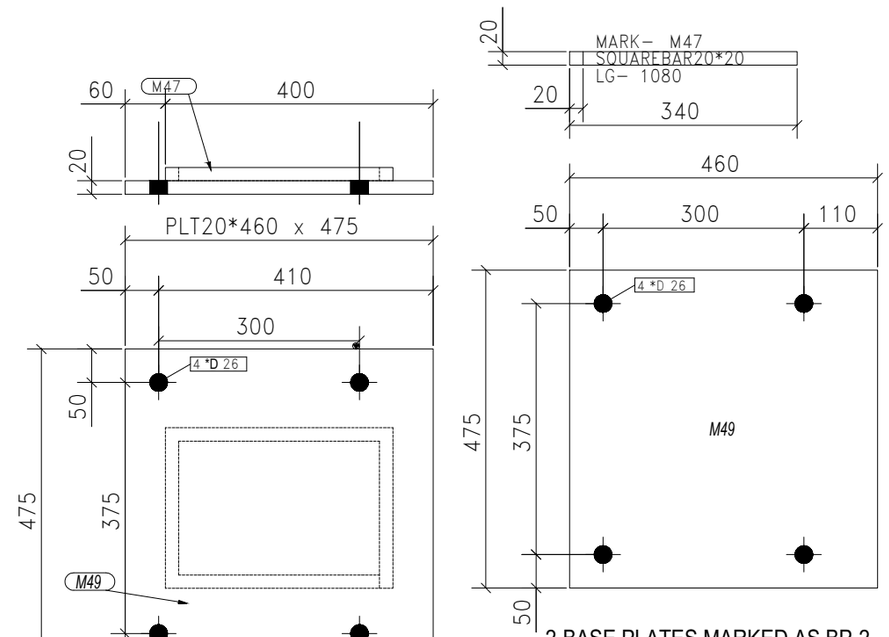


2-BASE PLATES MARKED AS BP-2

**BILL OF MATERIALS** ASSEMBLY MK'D : BP-2 ASSY QTY : 2

| Item Mark | Qty./ Assembly | Profile Size | | Length | | Total Qty. | | Material |
|---|---|---|---|---|---|---|---|---|
| M49 | 1 | PLT20*460 | | 475.00 | | 2 | | IS2062 |
| M47 | 1 | SQUAREBAR20*20 | | 1080.00 | | 2 | | IS2062 |

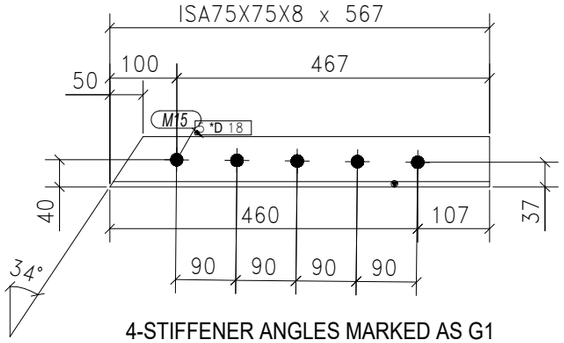


4-STIFFENER ANGLES MARKED AS G1

| BILL OF MATERIALS | ASSEMBLY MK'D : G1 | | | ASSY QTY : 4 | | | | |
|---|---|---|---|---|---|---|---|---|
| Item Mark | Qty./ Assembly | Profile Size | | Length | | Total Qty. | | Material |
| M15 | 1 | ISA75X75X8 | | 567.35 | | 4 | | IS2062 |

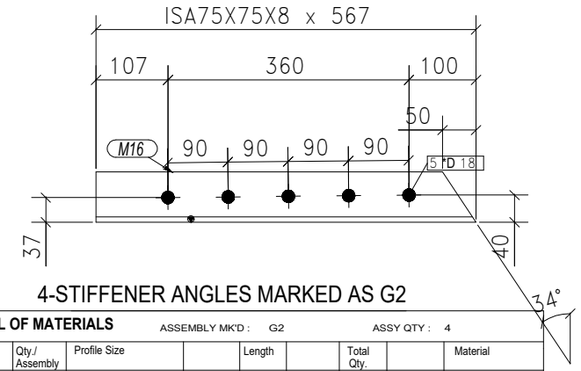


4-STIFFENER ANGLES MARKED AS G2

| BILL OF MATERIALS | ASSEMBLY MK'D : G2 | | | ASSY QTY : 4 | | | | |
|---|---|---|---|---|---|---|---|---|
| Item Mark | Qty./ Assembly | Profile Size | | Length | | Total Qty. | | Material |
| M16 | 1 | ISA75X75X8 | | 567.35 | | 4 | | IS2062 |

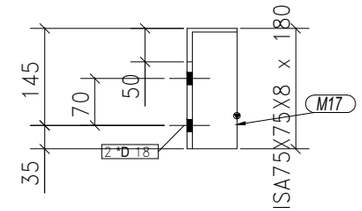


4-STIFFENER ANGLES MARKED AS G3

| BILL OF MATERIALS | ASSEMBLY MK'D : G3 | | | ASSY QTY : 4 | | | | |
|---|---|---|---|---|---|---|---|---|
| Item Mark | Qty./ Assembly | Profile Size | | Length | | Total Qty. | | Material |
| M17 | 1 | ISA75X75X8 | | 180.00 | | 4 | | IS2062 |

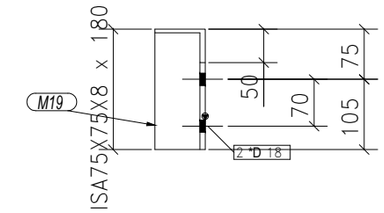


4-STIFFENER ANGLES MARKED AS G4

| BILL OF MATERIALS | ASSEMBLY MK'D : G4 | | | ASSY QTY : 4 | | | | |
|---|---|---|---|---|---|---|---|---|
| Item Mark | Qty./ Assembly | Profile Size | | Length | | Total Qty. | | Material |
| M19 | 1 | ISA75X75X8 | | 180.00 | | 4 | | IS2062 |

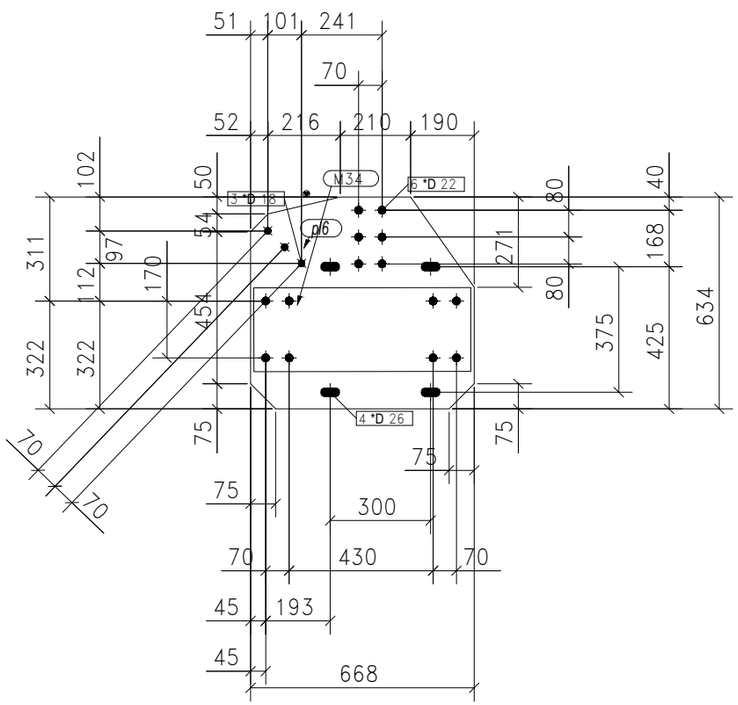


2-GUSSET PLATES MARKED AS G5

| BILL OF MATERIALS | ASSEMBLY MK'D : G5 | | | ASSY QTY : 2 | | | | |
|---|---|---|---|---|---|---|---|---|
| Item Mark | Qty./ Assembly | Profile Size | | Length | | Total Qty. | | Material |
| pl6 | 1 | PL12*634 | | 667.74 | | 2 | | IS2062 |
| M34 | 1 | PLT16*250 | | 648.00 | | 2 | | IS2062 |

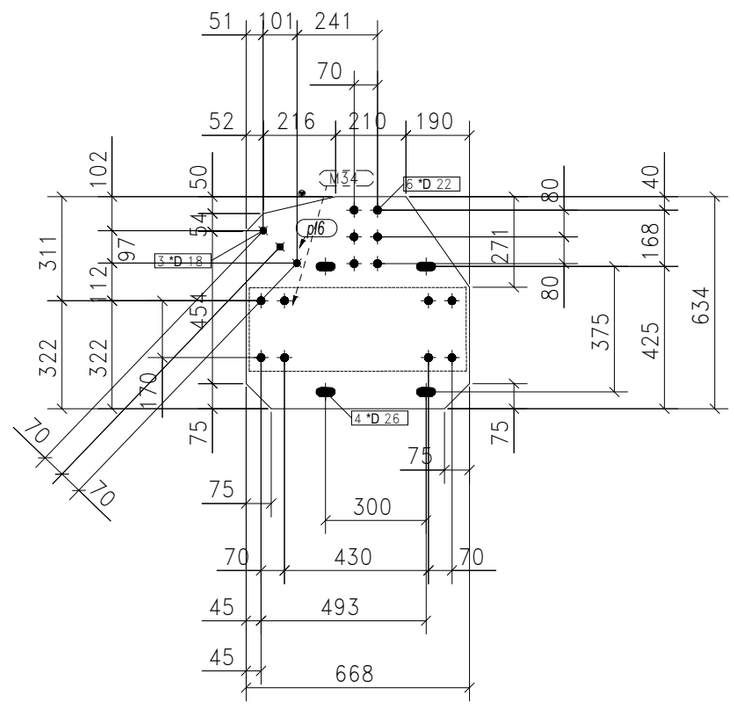


2-GUSSET PLATES MARKED AS G6

| BILL OF MATERIALS | ASSEMBLY MK'D : G6 | | | ASSY QTY : 2 | | | | |
|---|---|---|---|---|---|---|---|---|
| Item Mark | Qty./ Assembly | Profile Size | | Length | | Total Qty. | | Material |
| pl6 | 1 | PL12*634 | | 667.74 | | 2 | | IS2062 |
| M34 | 1 | PLT16*250 | | 648.00 | | 2 | | IS2062 |

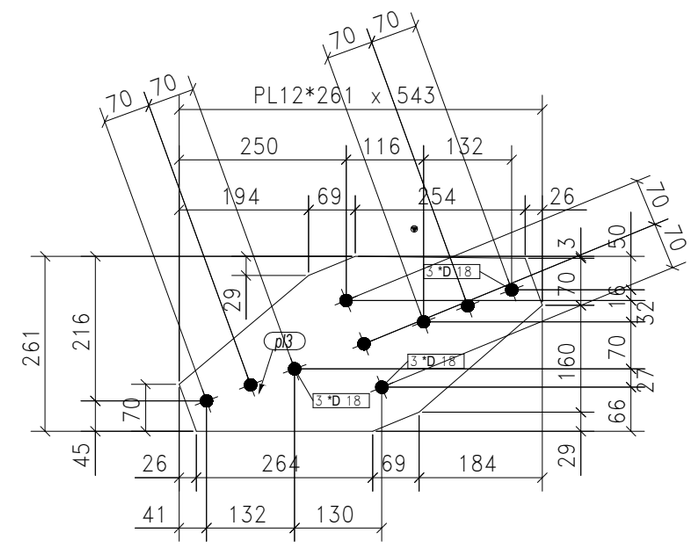


6-GUSSET PLATES MARKED AS G7

| BILL OF MATERIALS | ASSEMBLY MK'D : G7 | | | ASSY QTY : 6 | | | | |
|---|---|---|---|---|---|---|---|---|
| Item Mark | Qty./ Assembly | Profile Size | | Length | | Total Qty. | | Material |
| pl3 | 1 | PL12*261 | | 542.64 | | 6 | | IS2062 |

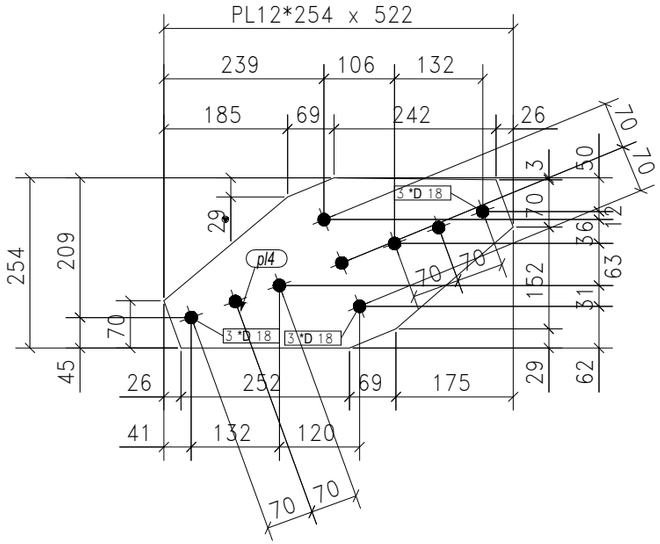


2-GUSSET PLATES MARKED AS G8

| BILL OF MATERIALS | ASSEMBLY MK'D : G8 | | | ASSY QTY : 2 | | | | |
|---|---|---|---|---|---|---|---|---|
| Item Mark | Qty./ Assembly | Profile Size | | Length | | Total Qty. | | Material |
| pl4 | 1 | PL12*254 | | 521.95 | | 2 | | IS2062 |

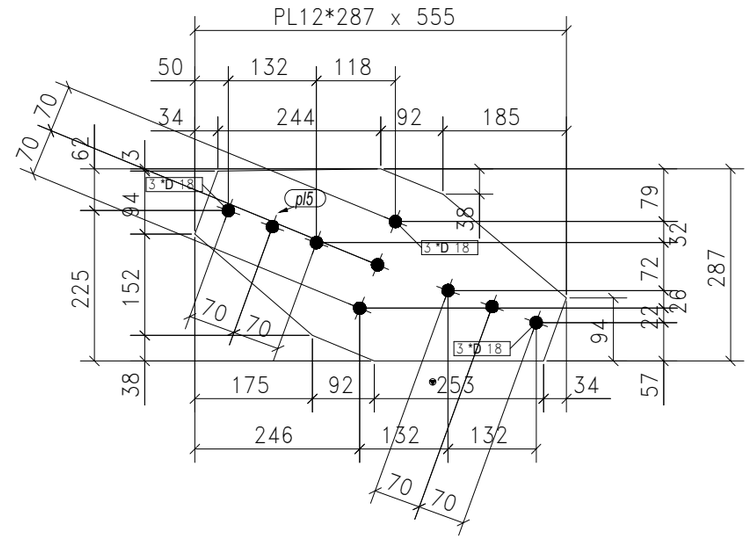


2-GUSSET PLATES MARKED AS G9

| BILL OF MATERIALS | ASSEMBLY MK'D : G9 | | | ASSY QTY : 2 | | | | |
|---|---|---|---|---|---|---|---|---|
| Item Mark | Qty./ Assembly | Profile Size | | Length | | Total Qty. | | Material |
| pl5 | 1 | PL12*287 | | 554.97 | | 2 | | IS2062 |

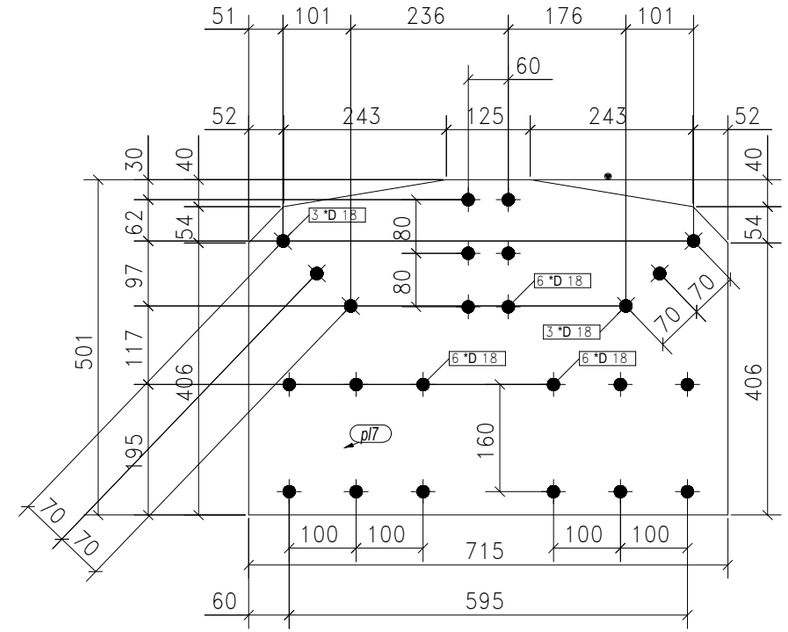


2-GUSSET PLATES MARKED AS G10

| BILL OF MATERIALS | ASSEMBLY MK'D : G10 | | | ASSY QTY : 2 | | | | |
|---|---|---|---|---|---|---|---|---|
| Item Mark | Qty./ Assembly | Profile Size | | Length | | Total Qty. | | Material |
| pl7 | 1 | PL12*501 | | 715.49 | | 2 | | IS2062 |
| | | | | | | Total | | |

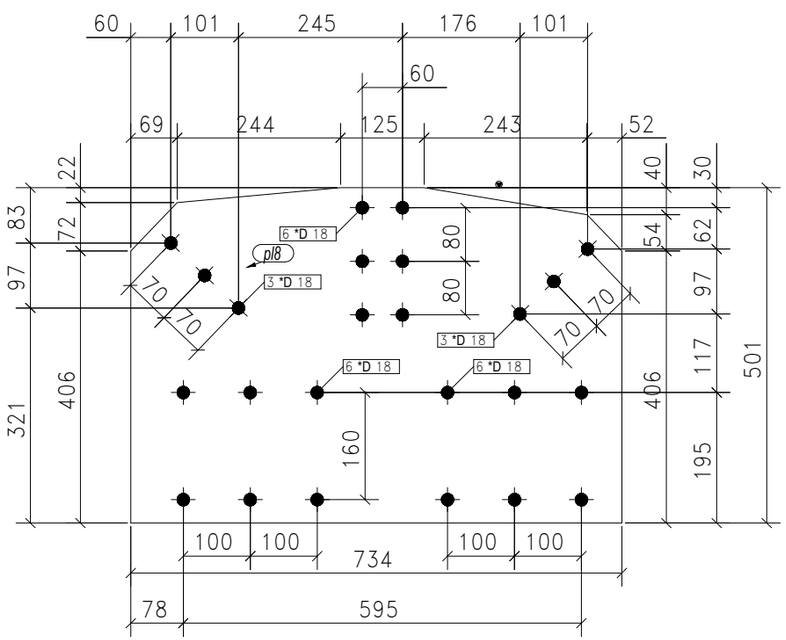


4-GUSSET PLATES MARKED AS G11

| BILL OF MATERIALS | ASSEMBLY MK'D : G11 | | | ASSY QTY : 4 | | | | |
|---|---|---|---|---|---|---|---|---|
| Item Mark | Qty./ Assembly | Profile Size | | Length | | Total Qty. | | Material |
| pl8 | 1 | PL12*501 | | 733.54 | | 4 | | IS2062 |

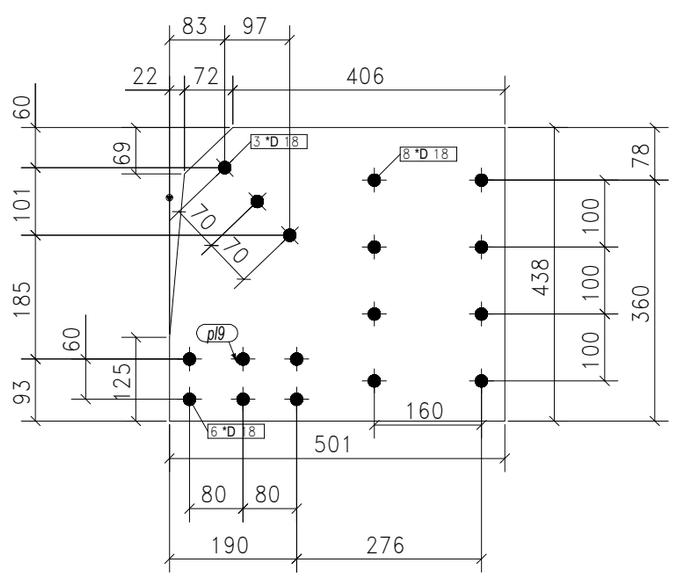


4-GUSSET PLATES MARKED AS G12

| BILL OF MATERIALS | ASSEMBLY MK'D : G12 | | | ASSY QTY : 4 | | | | |
|---|---|---|---|---|---|---|---|---|
| Item Mark | Qty./ Assembly | Profile Size | | Length | | Total Qty. | | Material |
| pl9 | 1 | PL12*438 | | 501.00 | | 4 | | IS2062 |

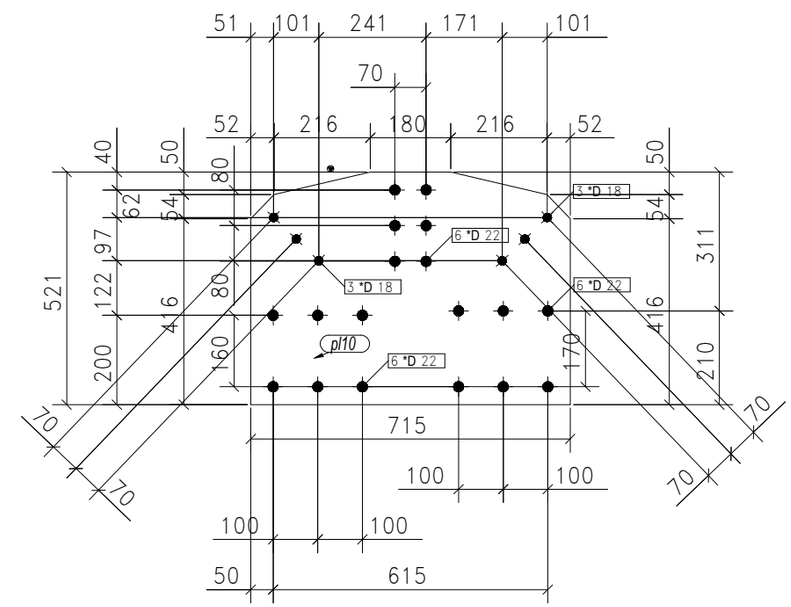


8-GUSSET PLATES MARKED AS G13

| BILL OF MATERIALS | ASSEMBLY MK'D : G13 | | | ASSY QTY : 8 | | | | |
|---|---|---|---|---|---|---|---|---|
| Item Mark | Qty./ Assembly | Profile Size | | Length | | Total Qty. | | Material |
| pl10 | 1 | PL12*521 | | 715.49 | | 8 | | IS2062 |

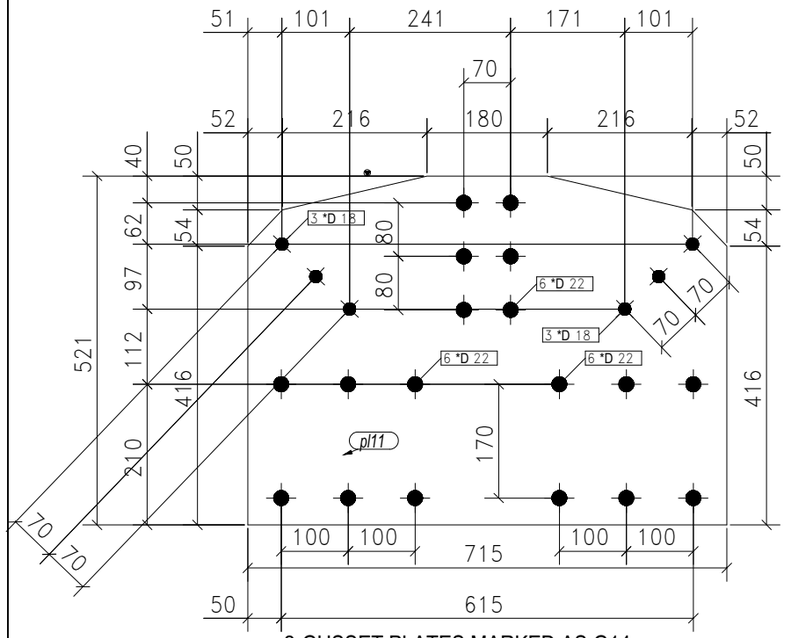


## 2-GUSSET PLATES MARKED AS G14

**BILL OF MATERIALS** ASSEMBLY MK'D : G14 ASSY QTY : 2

| Item Mark | Qty./ Assembly | Profile Size | | Length | | Total Qty. | | Material |
|---|---|---|---|---|---|---|---|---|
| pl11 | 1 | PL12*521 | | 715.49 | | 2 | | IS2062 |

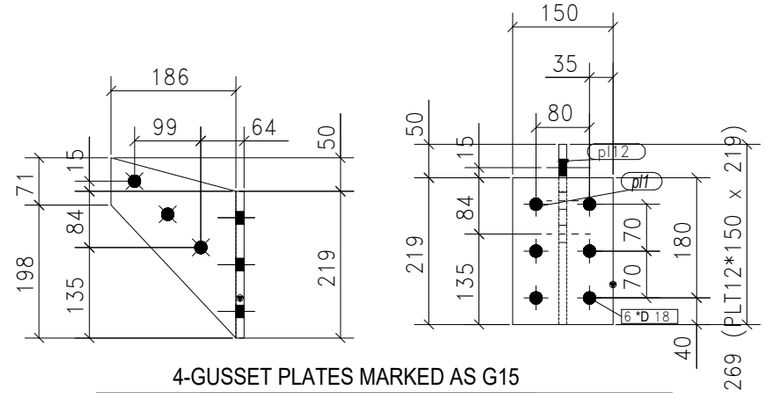


## 4-GUSSET PLATES MARKED AS G15

**BILL OF MATERIALS** ASSEMBLY MK'D : G15 ASSY QTY : 4

| Item Mark | Qty./ Assembly | Profile Size | | Length | | Total Qty. | | Material |
|---|---|---|---|---|---|---|---|---|
| pl1 | 1 | PLT12*150 | | 219.20 | | 4 | | IS2062 |
| pl12 | 1 | PL12*150 | | 323.89 | | 4 | | IS2062 |

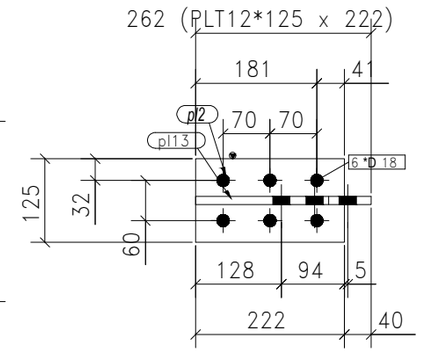


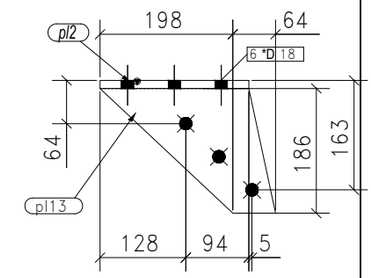


## 4-GUSSET PLATES MARKED AS G16

**BILL OF MATERIALS** ASSEMBLY MK'D : G16 ASSY QTY : 4

| Item Mark | Qty./ Assembly | Profile Size | | Length | | Total Qty. | | Material |
|---|---|---|---|---|---|---|---|---|
| pl2 | 1 | PLT12*125 | | 222.13 | | 4 | | IS2062 |
| pl13 | 1 | PL12*152 | | 318.74 | | 4 | | IS2062 |

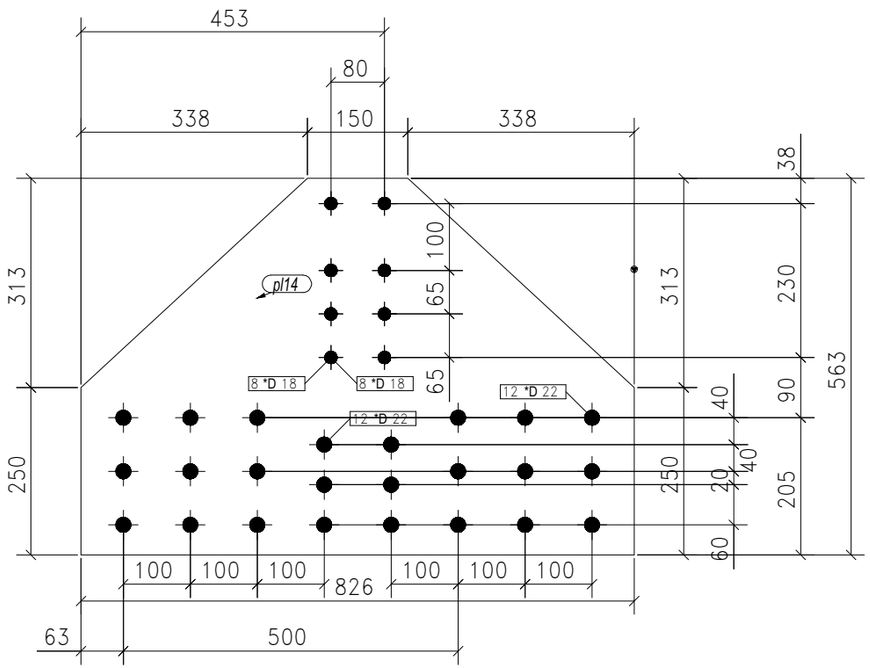


## 4-GUSSET PLATES MARKED AS G17

**BILL OF MATERIALS** ASSEMBLY MK'D : G17 ASSY QTY : 4

| Item Mark | Qty./ Assembly | Profile Size | | Length | | Total Qty. | | Material |
|---|---|---|---|---|---|---|---|---|
| pl14 | 1 | PLT16*563 | | 826.28 | | 4 | | IS2062 |

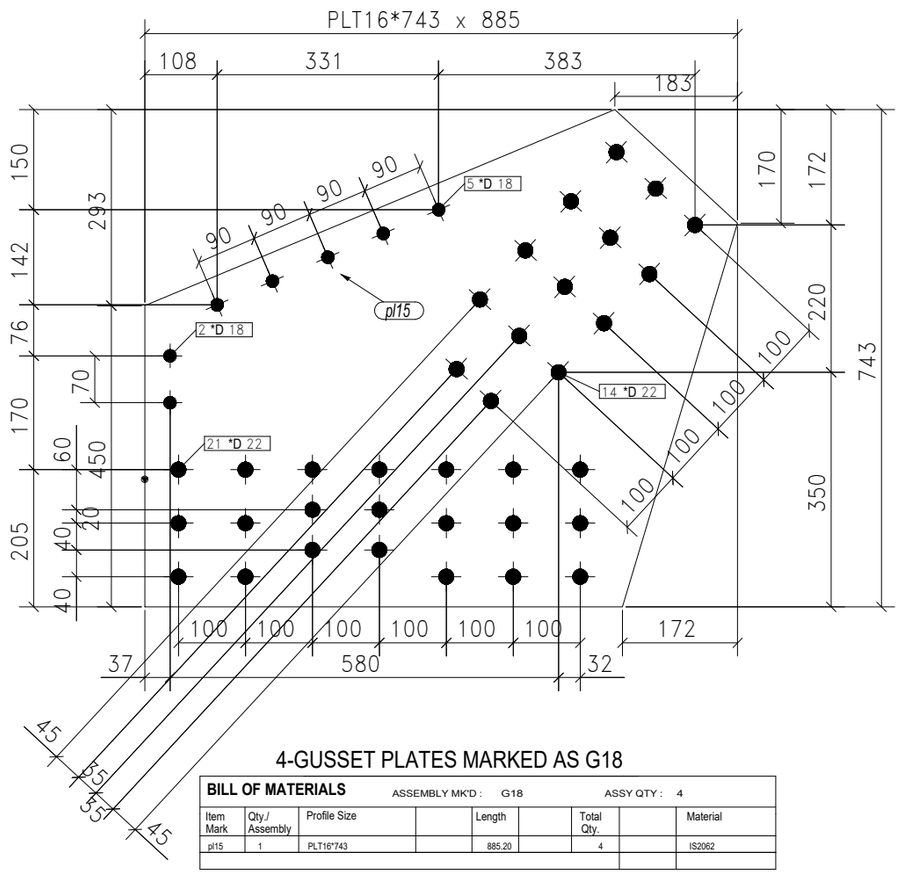


## 4-GUSSET PLATES MARKED AS G18

**BILL OF MATERIALS** ASSEMBLY MK'D : G18 ASSY QTY : 4

| Item Mark | Qty./ Assembly | Profile Size | | Length | | Total Qty. | | Material |
|---|---|---|---|---|---|---|---|---|
| pl15 | 1 | PLT16*743 | | 885.20 | | 4 | | IS2062 |

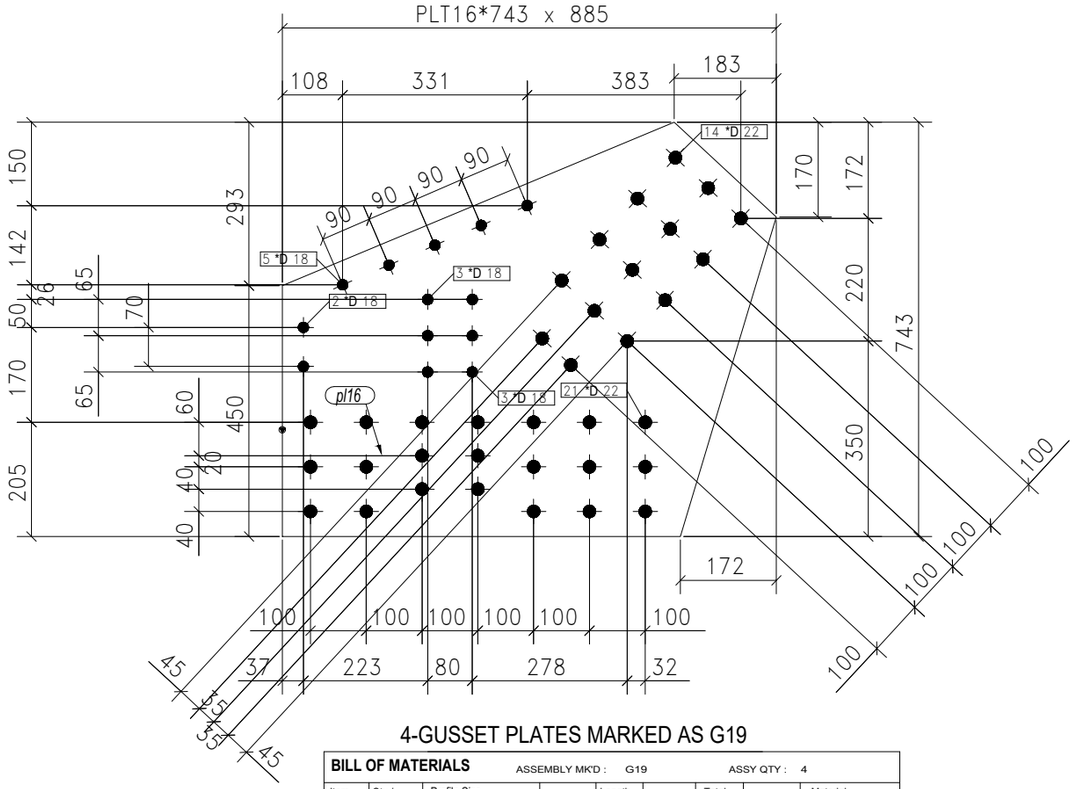


4-GUSSET PLATES MARKED AS G19

| BILL OF MATERIALS | ASSEMBLY MK'D : G19 | | | ASSY QTY : 4 | | | | |
|---|---|---|---|---|---|---|---|---|
| Item Mark | Qty./ Assembly | Profile Size | | Length | | Total Qty. | | Material |
| pl16 | 1 | PLT16*743 | | 885.20 | | 4 | | IS2062 |
| | | | | | | | | |

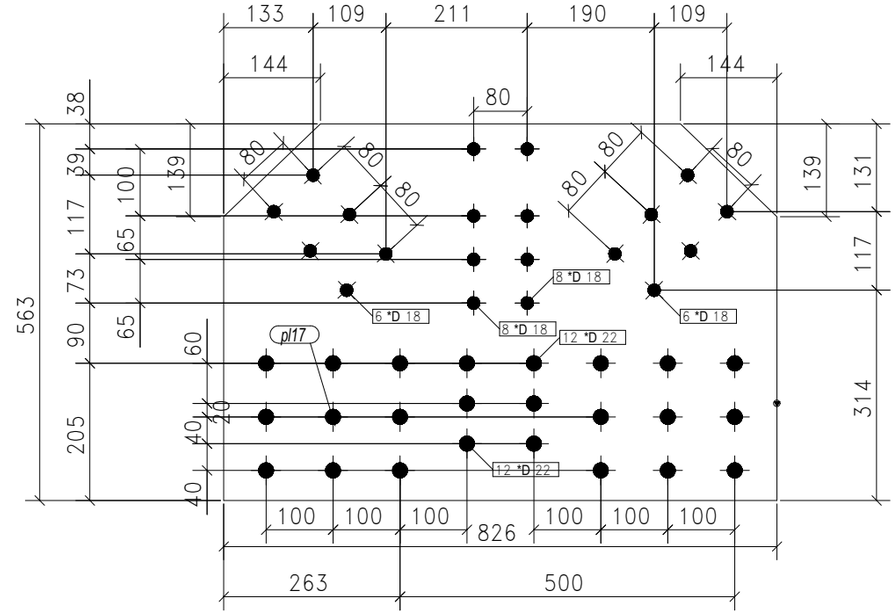


2-GUSSET PLATES MARKED AS G20

| BILL OF MATERIALS | ASSEMBLY MK'D : G20 | | | ASSY QTY : 2 | | | | |
|---|---|---|---|---|---|---|---|---|
| Item Mark | Qty./ Assembly | Profile Size | | Length | | Total Qty. | | Material |
| pl17 | 1 | PLT16*563 | | 826.28 | | 2 | | IS2062 |
| | | | | | | | | |

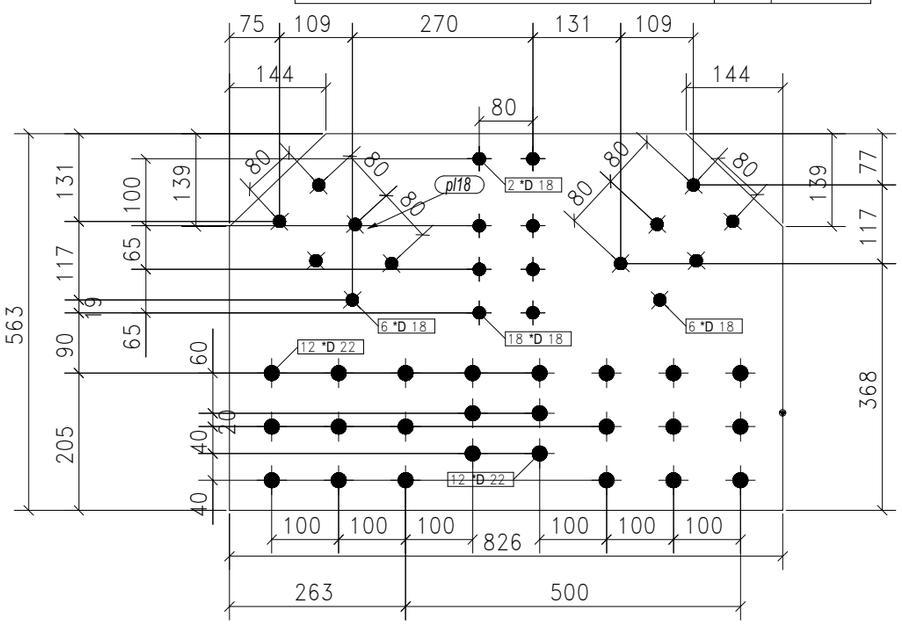


2-GUSSET PLATES MARKED AS G21

| BILL OF MATERIALS | ASSEMBLY MK'D : G21 | | | | ASSY QTY : 2 | | | |
|---|---|---|---|---|---|---|---|---|
| Item Mark | Qty./ Assembly | Profile Size | Wt./Meter | Length | Wt./Item | Total Qty. | Total Wt. | Material |
| pl18 | 1 | PLT16*563 | 125.60 | 826.28 | 58.40 | 2 | 116.79 | IS2062 |
| | | | | | | Total | 116.79 | |

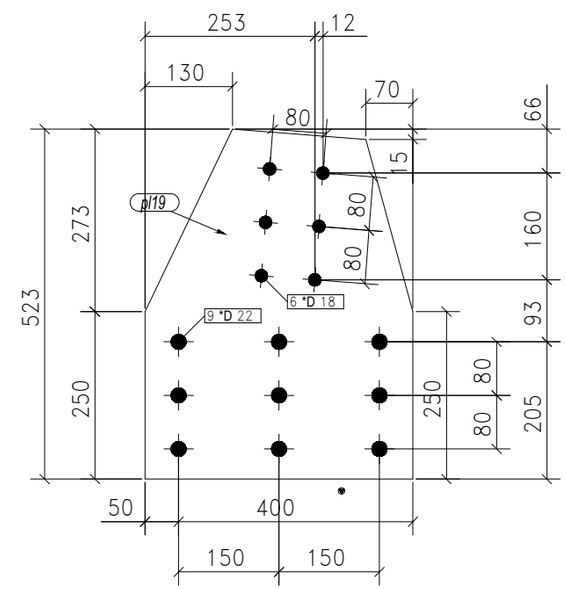


8-GUSSET PLATES MARKED AS G22

| BILL OF MATERIALS | ASSEMBLY MK'D : G22 | | | ASSY QTY : 8 | | | | |
|---|---|---|---|---|---|---|---|---|
| Item Mark | Qty./ Assembly | Profile Size | | Length | | Total Qty. | | Material |
| pl19 | 1 | PLT16*400 | | 522.72 | | 8 | | IS2062 |
| | | | | | | Total | | |

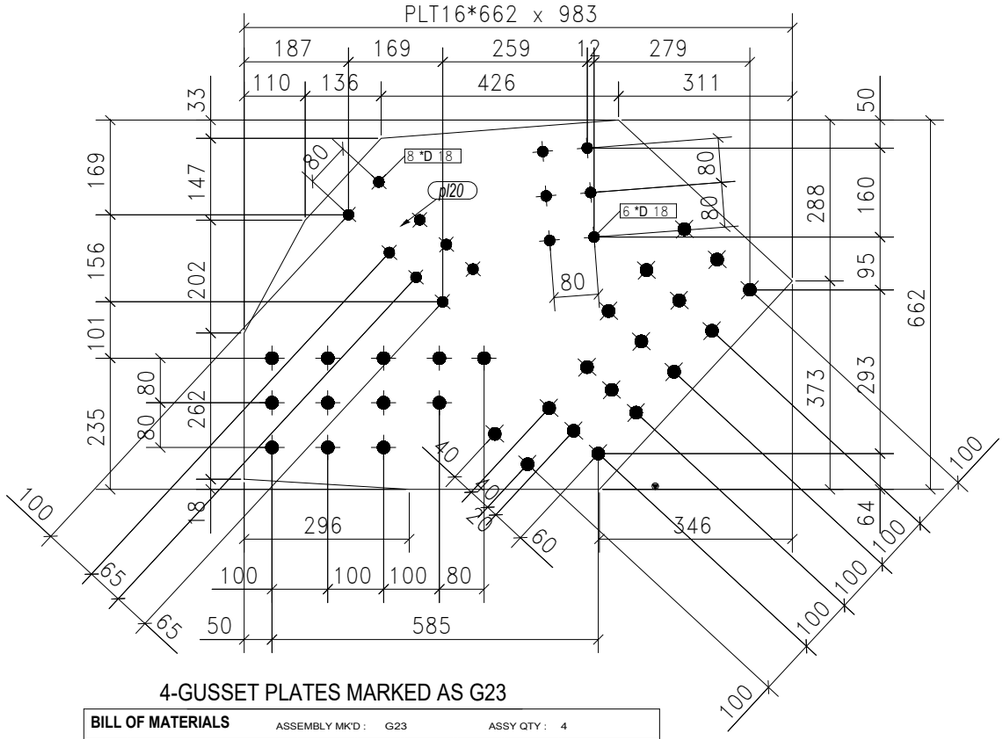


4-GUSSET PLATES MARKED AS G23

| BILL OF MATERIALS | ASSEMBLY MK'D : G23 | | | ASSY QTY : 4 | | | | |
|---|---|---|---|---|---|---|---|---|
| Item Mark | Qty./ Assembly | Profile Size | | Length | | Total Qty. | | Material |
| pl20 | 1 | PLT16*662 | | 982.56 | | 4 | | IS2062 |

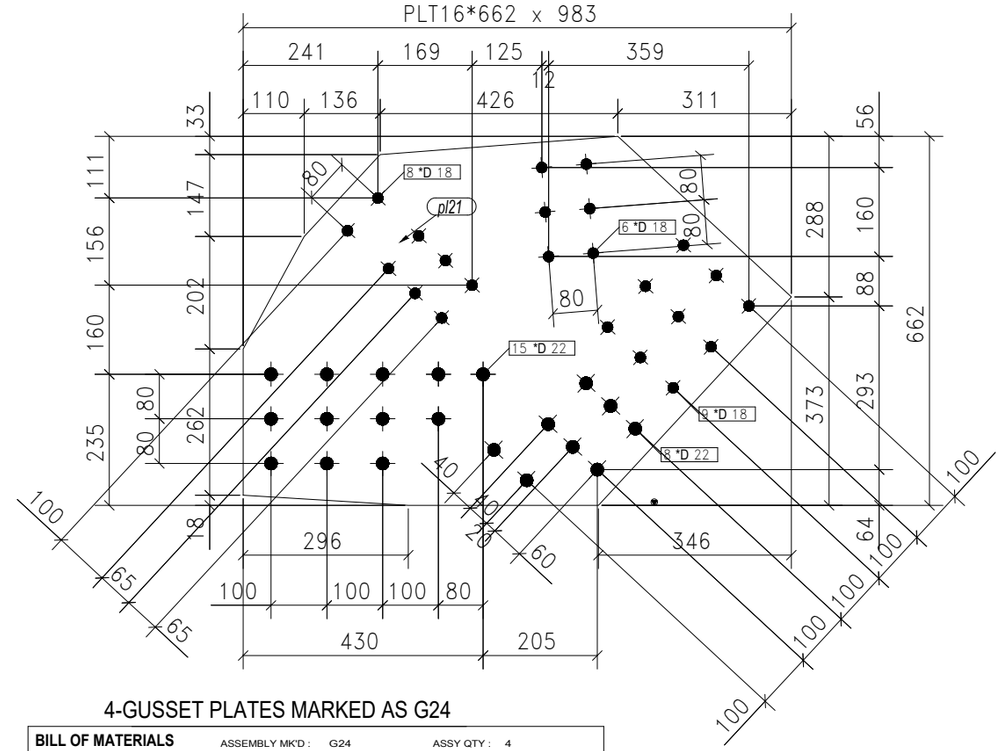


4-GUSSET PLATES MARKED AS G24

| BILL OF MATERIALS | ASSEMBLY MK'D : G24 | | | ASSY QTY : 4 | | | | |
|---|---|---|---|---|---|---|---|---|
| Item Mark | Qty./ Assembly | Profile Size | | Length | | Total Qty. | | Material |
| pl21 | 1 | PLT16*662 | | 982.56 | | 4 | | IS2062 |

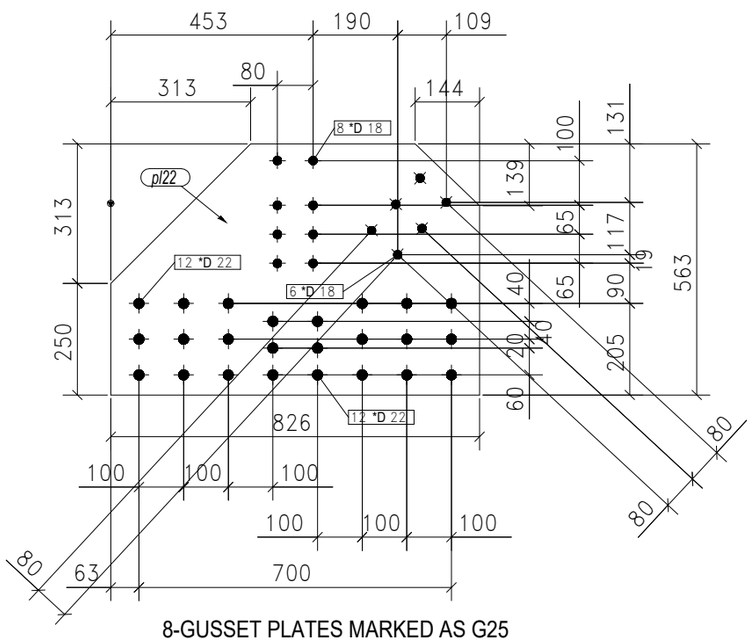


8-GUSSET PLATES MARKED AS G25

| BILL OF MATERIALS | ASSEMBLY MK'D : G25 | | | ASSY QTY : 8 | | | | |
|---|---|---|---|---|---|---|---|---|
| Item Mark | Qty./ Assembly | Profile Size | | Length | | Total Qty. | | Material |
| pl22 | 1 | PLT16*563 | | 826.28 | | 8 | | IS2062 |

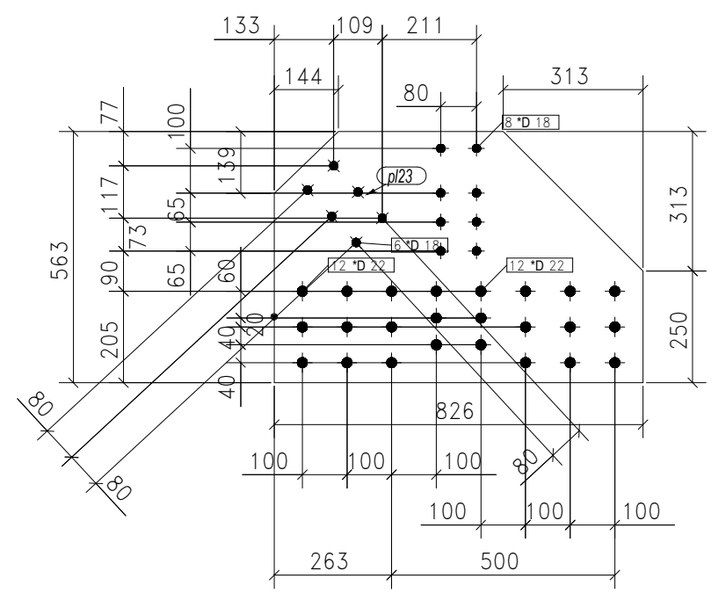


16-GUSSET PLATES MARKED AS G26

| BILL OF MATERIALS | ASSEMBLY MK'D : G26 | | | ASSY QTY : 16 | | | | |
|---|---|---|---|---|---|---|---|---|
| Item Mark | Qty./ Assembly | Profile Size | | Length | | Total Qty. | | Material |
| pl23 | 1 | PLT16*563 | | 826.28 | | 16 | | IS2062 |

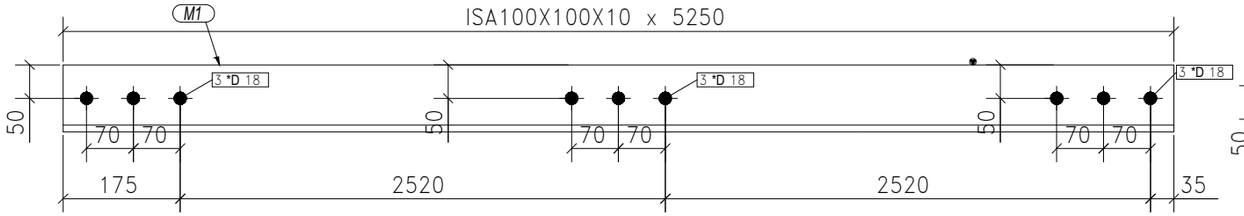


4-BRACING S MARKED AS BR-1

**BILL OF MATERIALS** ASSEMBLY MK'D : BR-1 ASSY QTY : 4

| Item Mark | Qty./ Assembly | Profile Size | | Length | | Total Qty. | | Material |
|---|---|---|---|---|---|---|---|---|
| M1 | 1 | ISA100X100X10 | | 5250.31 | | 4 | | IS2062 |

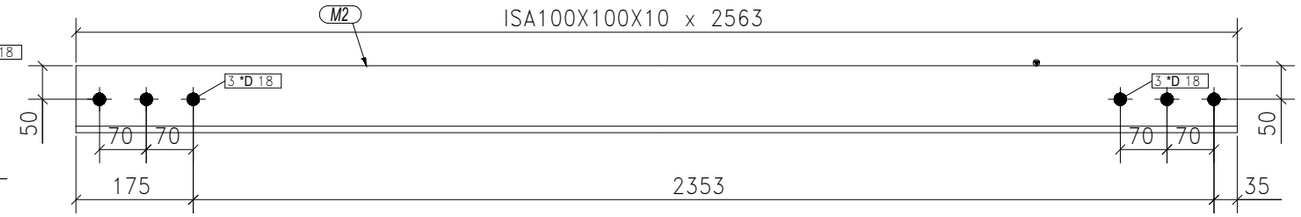


4-BRACING S MARKED AS BR-2

**BILL OF MATERIALS** ASSEMBLY MK'D : BR-2 ASSY QTY : 4

| Item Mark | Qty./ Assembly | Profile Size | | Length | | Total Qty. | | Material |
|---|---|---|---|---|---|---|---|---|
| M2 | 1 | ISA100X100X10 | | 2563.06 | | 4 | | IS2062 |

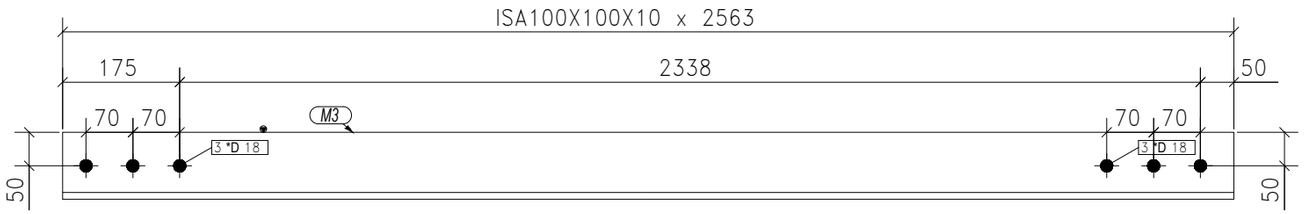


2-BRACING S MARKED AS BR-3

**BILL OF MATERIALS** ASSEMBLY MK'D : BR-3 ASSY QTY : 2

| Item Mark | Qty./ Assembly | Profile Size | | Length | | Total Qty. | | Material |
|---|---|---|---|---|---|---|---|---|
| M3 | 1 | ISA100X100X10 | | 2563.06 | | 2 | | IS2062 |

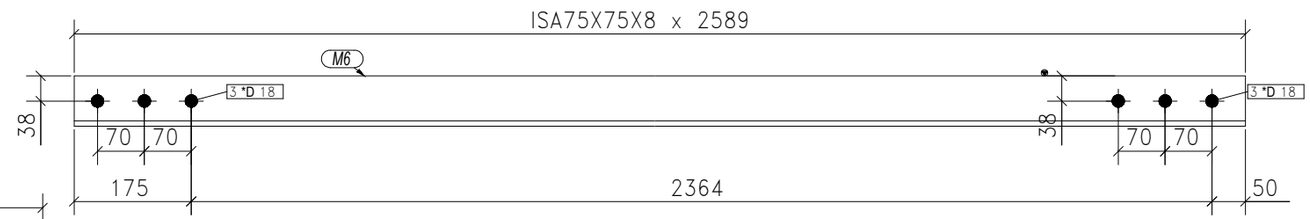


2-BRACING S MARKED AS BR-6

**BILL OF MATERIALS** ASSEMBLY MK'D : BR-6 ASSY QTY : 2

| Item Mark | Qty./ Assembly | Profile Size | | Length | | Total Qty. | | Material |
|---|---|---|---|---|---|---|---|---|
| M6 | 1 | ISA75X75X8 | | 2589.10 | | 2 | | IS2062 |

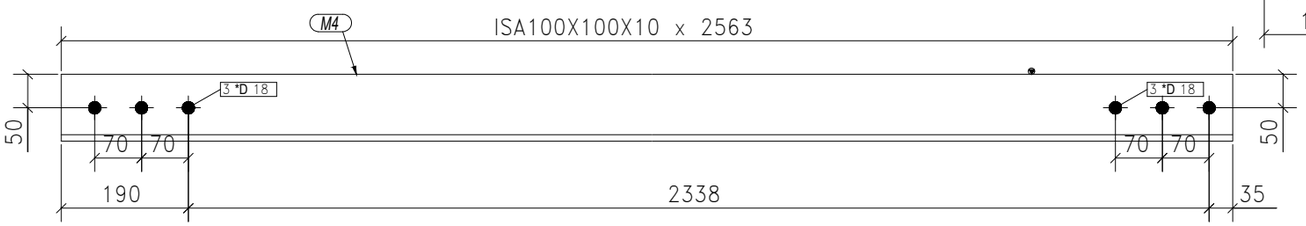


ONE-BRACING MARKED AS BR-4

**BILL OF MATERIALS** ASSEMBLY MK'D : BR-4 ASSY QTY : 1

| Item Mark | Qty./ Assembly | Profile Size | | Length | | Total Qty. | | Material |
|---|---|---|---|---|---|---|---|---|
| M4 | 1 | ISA100X100X10 | | 2563.06 | | 1 | | IS2062 |

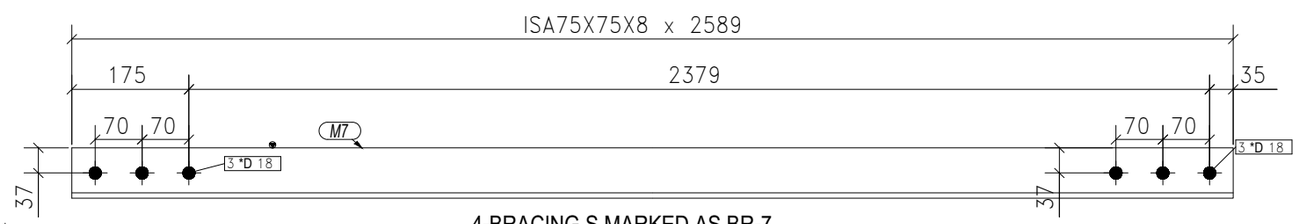


4-BRACING S MARKED AS BR-7

**BILL OF MATERIALS** ASSEMBLY MK'D : BR-7 ASSY QTY : 4

| Item Mark | Qty./ Assembly | Profile Size | | Length | | Total Qty. | | Material |
|---|---|---|---|---|---|---|---|---|
| M7 | 1 | ISA75X75X8 | | 2589.11 | | 4 | | IS2062 |

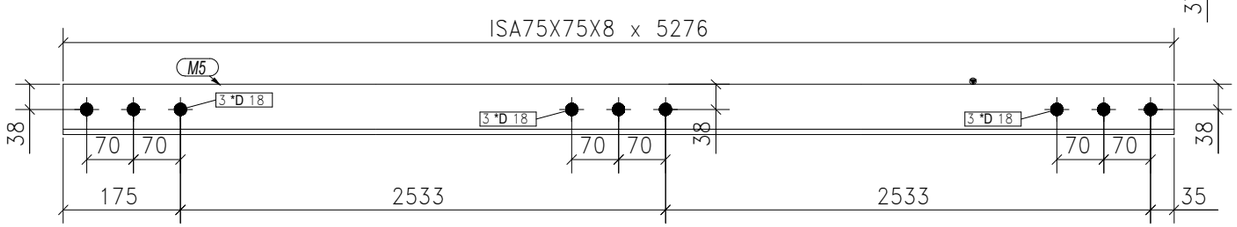


16-BRACING S MARKED AS BR-5

**BILL OF MATERIALS** ASSEMBLY MK'D : BR-5 ASSY QTY : 16

| Item Mark | Qty./ Assembly | Profile Size | | Length | | Total Qty. | Total Wt. | Material |
|---|---|---|---|---|---|---|---|---|
| M5 | 1 | ISA75X75X8 | | 5276.36 | | 16 | | IS2062 |

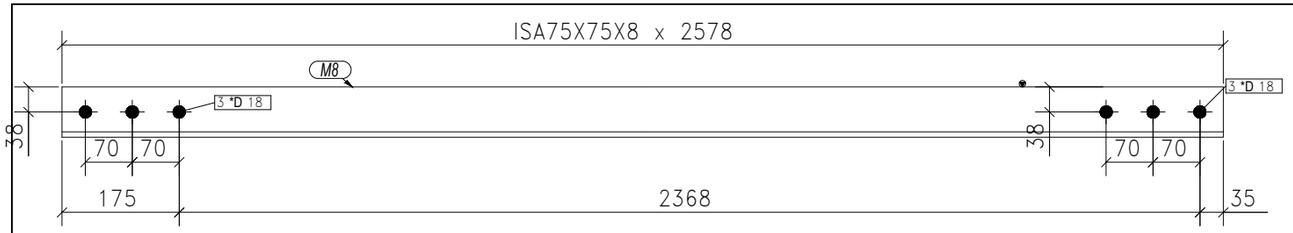


12-BRACING S MARKED AS BR-8

**BILL OF MATERIALS** ASSEMBLY MK'D : BR-8 ASSY QTY : 12

| Item Mark | Qty./ Assembly | Profile Size | | Length | | Total Qty. | | Material |
|---|---|---|---|---|---|---|---|---|
| M8 | 1 | ISA75X75X8 | | 2578.10 | | 12 | | IS2062 |
| | | | | | | | | |

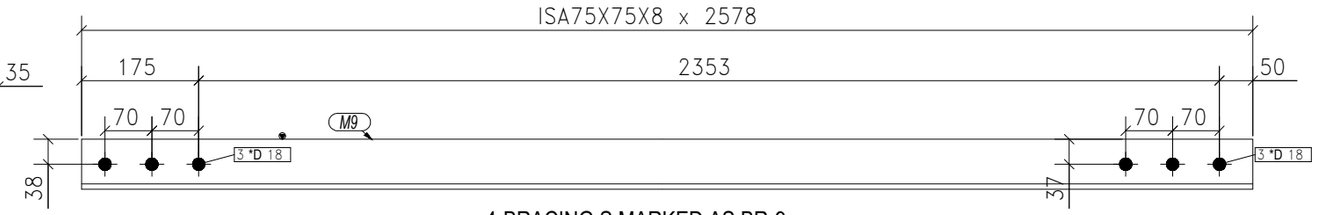


4-BRACING S MARKED AS BR-9

**BILL OF MATERIALS** ASSEMBLY MK'D : BR-9 ASSY QTY : 4

| Item Mark | Qty./ Assembly | Profile Size | | Length | | Total Qty. | | Material |
|---|---|---|---|---|---|---|---|---|
| M9 | 1 | ISA75X75X8 | | 2578.10 | | 4 | | IS2062 |
| | | | | | | | | |

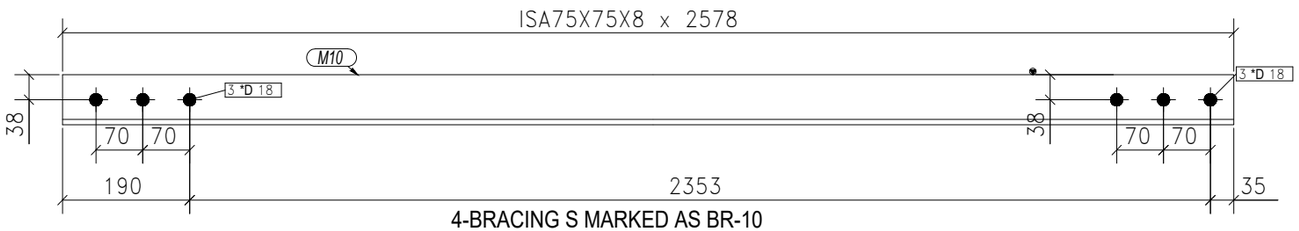


4-BRACING S MARKED AS BR-10

**BILL OF MATERIALS** ASSEMBLY MK'D : BR-10 ASSY QTY : 4

| Item Mark | Qty./ Assembly | Profile Size | | Length | | Total Qty. | | Material |
|---|---|---|---|---|---|---|---|---|
| M10 | 1 | ISA75X75X8 | | | | 4 | | IS2062 |
| | | | | | | | | |

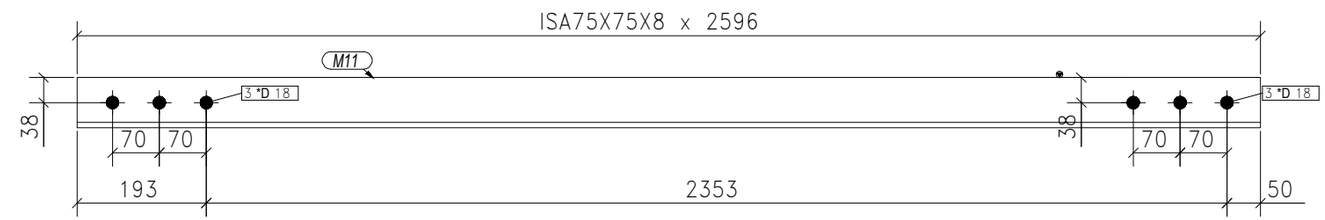


2-BRACING S MARKED AS BR-11

**BILL OF MATERIALS** ASSEMBLY MK'D : BR-11 ASSY QTY : 2

| Item Mark | Qty./ Assembly | Profile Size | | Length | | Total Qty. | | Material |
|---|---|---|---|---|---|---|---|---|
| M11 | 1 | ISA75X75X8 | | 2596.10 | | 2 | | IS2062 |
| | | | | | | | | |

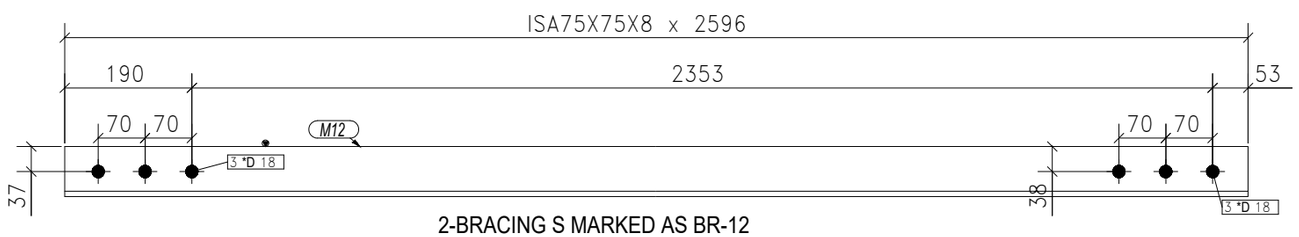


2-BRACING S MARKED AS BR-12

**BILL OF MATERIALS** ASSEMBLY MK'D : BR-12 ASSY QTY : 2

| Item Mark | Qty./ Assembly | Profile Size | | Length | | Total Qty. | | Material |
|---|---|---|---|---|---|---|---|---|
| M12 | 1 | ISA75X75X8 | | 2596.10 | | 2 | | IS2062 |
| | | | | | | Total | | |

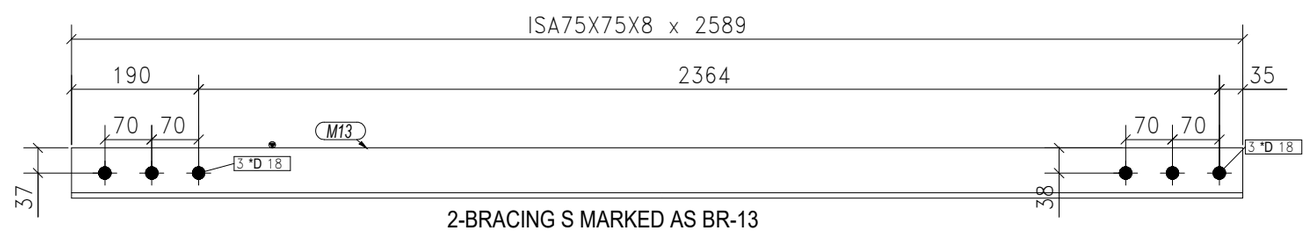


2-BRACING S MARKED AS BR-13

**BILL OF MATERIALS** ASSEMBLY MK'D : BR-13 ASSY QTY : 2

| Item Mark | Qty./ Assembly | Profile Size | | Length | | Total Qty. | | Material |
|---|---|---|---|---|---|---|---|---|
| M13 | 1 | ISA75X75X8 | | 2589.10 | | 2 | | IS2062 |
| | | | | | | | | |

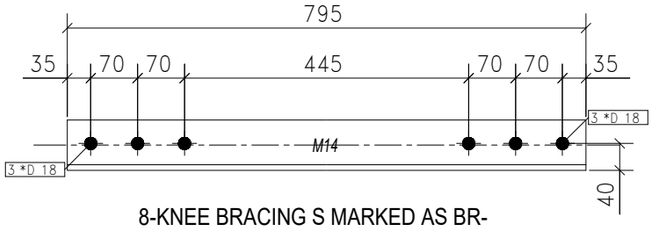


8-KNEE BRACING S MARKED AS BR-

**BILL OF MATERIALS** ASSEMBLY MK'D : BR-14 ASSY QTY : 8

| Item Mark | Qty./ Assembly | Profile Size | | Length | | Total Qty. | | Material |
|---|---|---|---|---|---|---|---|---|
| M14 | 1 | ISA75X75X8 | | 794.52 | | 8 | | IS2062 |

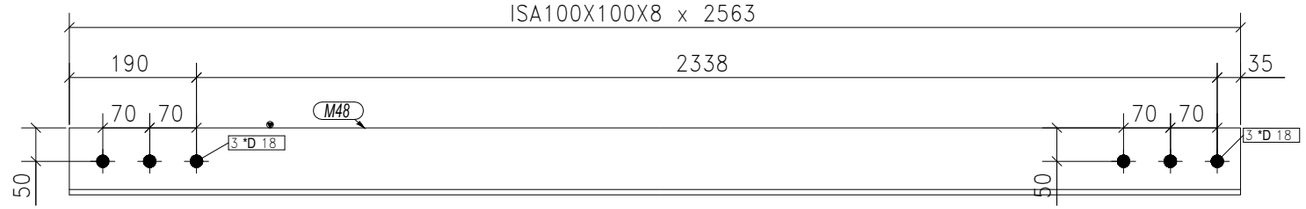


ONE-BRACING MARKED AS BR-15

**BILL OF MATERIALS** ASSEMBLY MK'D : BR-15 ASSY QTY : 1

| Item Mark | Qty./ Assembly | Profile Size | | Length | | Total Qty. | | Material |
|---|---|---|---|---|---|---|---|---|
| M48 | 1 | ISA100X100X8 | | 2563.06 | | 1 | | IS2062 |

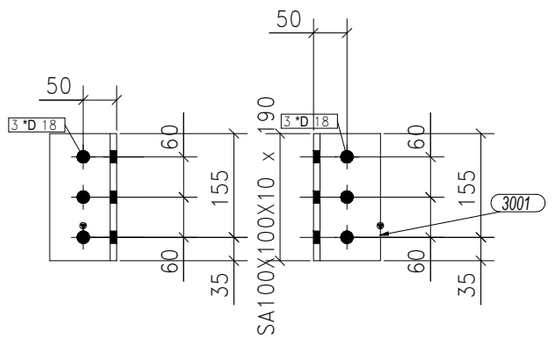


96-ANGLES MARKED AS CA-1

**BILL OF MATERIALS** ASSEMBLY MK'D : CA-1 ASSY QTY : 96

| Item Mark | Qty./ Assembly | Profile Size | | Length | | Total Qty. | | Material |
|---|---|---|---|---|---|---|---|---|
| 3001 | 1 | ISA100X100X10 | | 190.00 | | 96 | | IS2062 |

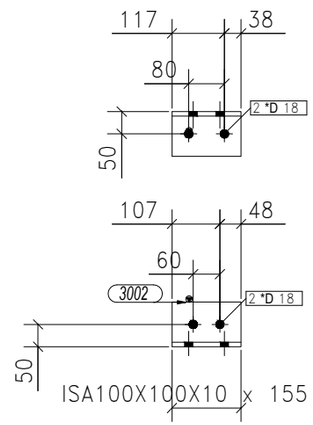


48-ANGLES MARKED AS CA-2

**BILL OF MATERIALS** ASSEMBLY MK'D : CA-2 ASSY QTY : 48

| Item Mark | Qty./ Assembly | Profile Size | | Length | | Total Qty. | | Material |
|---|---|---|---|---|---|---|---|---|
| 3002 | 1 | ISA100X100X10 | | 155.00 | | 48 | | IS2062 |

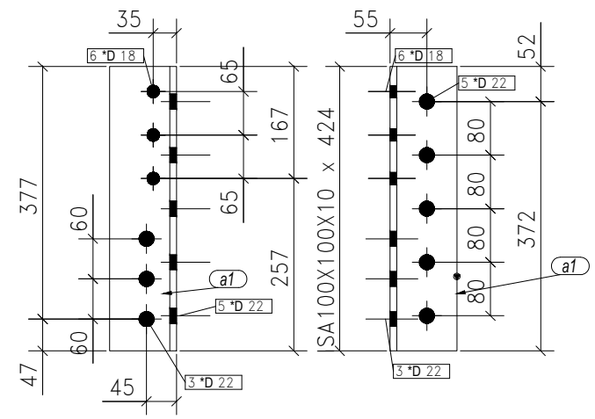


2-CLIP ANGLES MARKED AS CA-3

**BILL OF MATERIALS** ASSEMBLY MK'D : CA-3 ASSY QTY : 2

| Item Mark | Qty./ Assembly | Profile Size | | Length | | Total Qty. | | Material |
|---|---|---|---|---|---|---|---|---|
| a1 | 1 | ISA100X100X10 | | 424.43 | | 2 | | IS2062 |

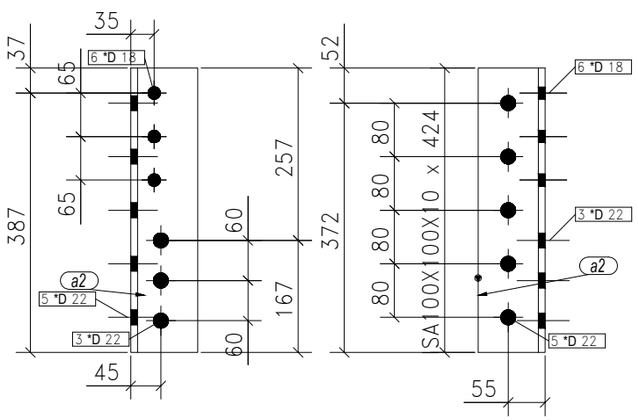


2-CLIP ANGLES MARKED AS CA-4

**BILL OF MATERIALS** ASSEMBLY MK'D : CA-4 ASSY QTY : 2

| Item Mark | Qty./ Assembly | Profile Size | | Length | | Total Qty. | | Material |
|---|---|---|---|---|---|---|---|---|
| a2 | 1 | ISA100X100X10 | | 424.43 | | 2 | | IS2062 |

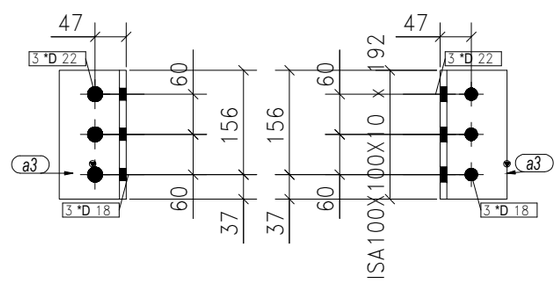


20-CLIP ANGLES MARKED AS CA-5

**BILL OF MATERIALS** ASSEMBLY MK'D : CA-5 ASSY QTY : 20

| Item Mark | Qty./ Assembly | Profile Size | | Length | | Total Qty. | | Material |
|---|---|---|---|---|---|---|---|---|
| a3 | 1 | ISA100X100X10 | | 192.22 | | 20 | | IS2062 |

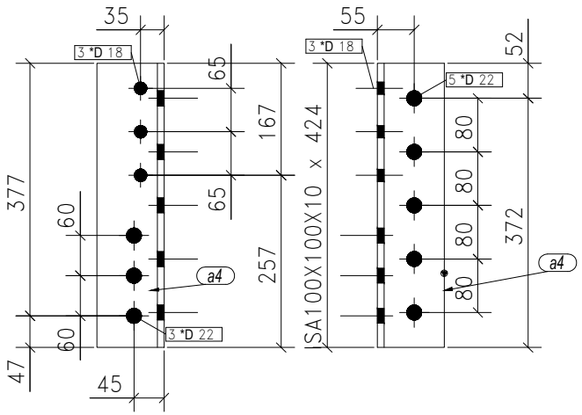


12-CLIP ANGLES MARKED AS CA-6

| BILL OF MATERIALS | ASSEMBLY MK'D : CA-6 | | | ASSY QTY : 12 | | | | |
|---|---|---|---|---|---|---|---|---|
| Item Mark | Qty./ Assembly | Profile Size | | Length | | Total Qty. | | Material |
| a4 | 1 | ISA100X100X10 | | 424.43 | | 12 | | IS2062 |

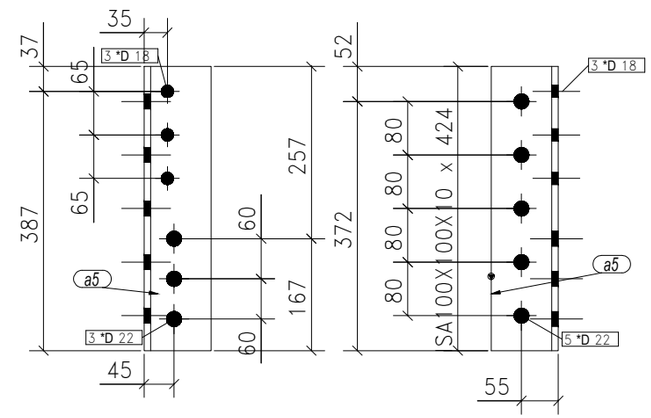


12-CLIP ANGLES MARKED AS CA-7

| BILL OF MATERIALS | ASSEMBLY MK'D : CA-7 | | | ASSY QTY : 12 | | | | |
|---|---|---|---|---|---|---|---|---|
| Item Mark | Qty./ Assembly | Profile Size | | Length | | Total Qty. | | Material |
| a5 | 1 | ISA100X100X10 | | 424.43 | | 12 | | IS2062 |

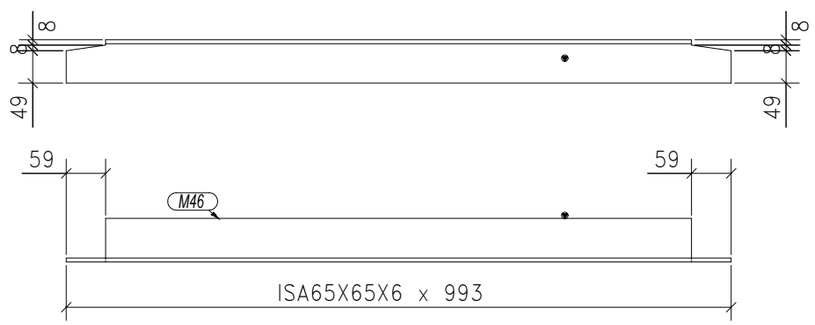


60-CHQPL RIBS MARKED AS CPL-1

| BILL OF MATERIALS | ASSEMBLY MK'D : CPL-1 | | | ASSY QTY : 60 | | | | |
|---|---|---|---|---|---|---|---|---|
| Item Mark | Qty./ Assembly | Profile Size | | Length | | Total Qty. | | Material |
| M46 | 1 | ISA65X65X6 | | 993.10 | | 60 | | IS2062 |

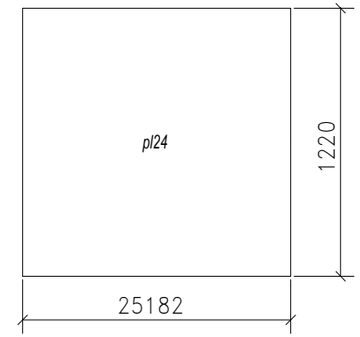


2-CHQ PLATES MARKED AS CPL-2

| BILL OF MATERIALS | ASSEMBLY MK'D : CPL-2 | | | ASSY QTY : 2 | | | | |
|---|---|---|---|---|---|---|---|---|
| Item Mark | Qty./ Assembly | Profile Size | | Length | | Total Qty. | Total Wt. | Material |
| pl24 | 1 | PLT6*1220 | | 25182.00 | | 2 | | |